REGULATOR

RGLS14

Regulator One Hole Lavatory Faucet with Wheel Handle



SHOWN IN REGULATOR ONE HOLE LAVATORY FAUCET WITH WHEEL HANDLE | RGLS14

TECHNICAL DETAILS

ADA Compliance: Yes
Deck Thickness Maximum: 2 3/16"
Deck Thickness Minimum: 1/4"
Fittings Hole Diameter: 1 3/4"
Handle Turn Angle: Quarter Turn
Inlet Connection Size: 3/8"
Inlet Connection Type: Compression Connector Hoses
Number Of Holes: One Hole
Restricted Maximum Flow Rate: 1.2 gpm
Spout Swivel: Y
Valve Material: Brass and Ceramic
Water Pressure Maximum: 85.0 psi
Water Pressure Minimum: 20.0 psi
Water Pressure Recommended: 45.0 psi

INSPIRATION

With striking scale and unique design, Regulator commands attention through its tribute to early 20th-century boiler room controls, when pride was lavished on hard-built parts. Each handcrafted fitting brings dramatic beauty through powerful proportions and honest details.

CODES & STANDARDS

RGLS14-F.RX, NSF/ANSI/CAN 61:Q < 1, NSF/ANSI/CAN 372, ASME A112.18.1/CSA B125.1, WaterSense(1.0GPM and 1.2GPM Only), CEC, DOE, State of MA

PRODUCT FEATURES

Solid Brass Wheel Handle

Includes European push touch style drain.

Standard flow rate is 1.2gpm (4.5L/min)

CERTIFICATIONS

PRODUCT (NOTES)

REGULATOR

RGLS14

Regulator One Hole Lavatory Faucet with Wheel Handle

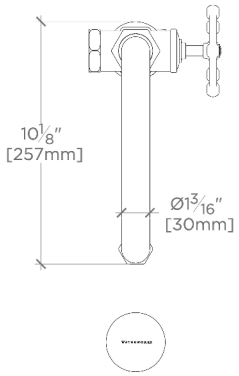

TOP VIEW SCALE: 1½″=1′-0″

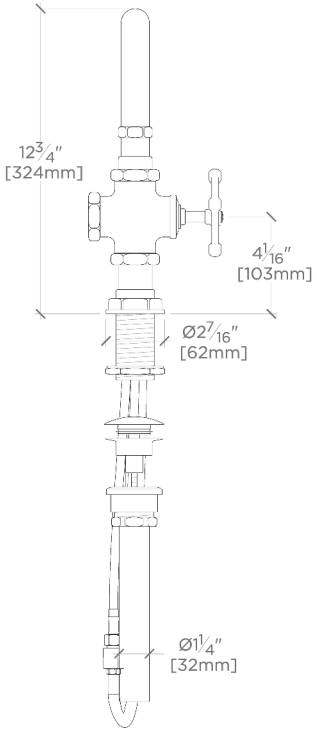

FRONT VIEW SCALE: 1½″=1′-0″

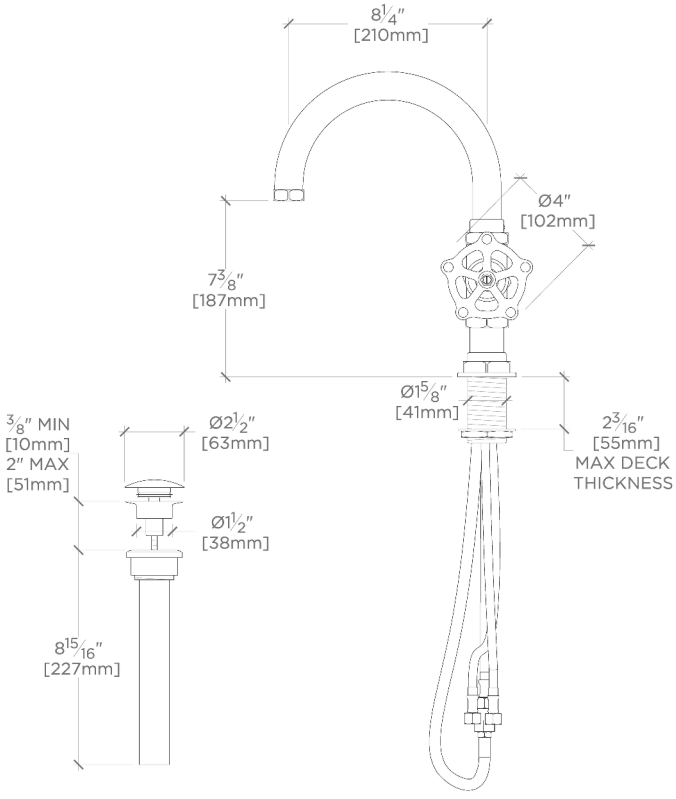

SIDE VIEW SCALE: 1½″=1′-0″