BOND

BTH42D

Bond Union Series Integrated Thermostatic and Two Way Diverter Trim with Enamel Guilloche Lines Knob and Lever Handles

TECHNICAL DETAILS

ADA Compliance: Yes
Integrated Diverter: N
Number of Holes: Two Hole
Primary Material: Brass

INSPIRATION

The Bond Collection: Modern bath designs infused with rare soul and artistry. Explore a range of statement-making elements: fittings, washstands, mirrors and more.

PRODUCT FEATURES

Knob and Lever Handles

Allows bather to adjust temperature of all waterway outlets with a hot limit safety stop providing anti-scald protection

Features Guilloche Lines combined with Enamel Lever and Knob Handles

Stocked in Nickel and Brass

Requires rough valve, sold separately: GUTH72 (USA) or GU72TH (UK/International)

BOND

BTH42D

Bond Union Series Integrated Thermostatic and Two Way Diverter
Trim with Enamel Guilloche Lines Knob and Lever Handles

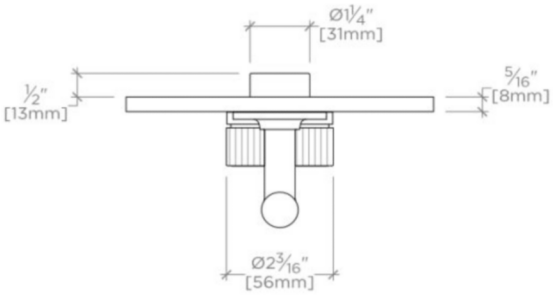

TOP VIEW SCALE: 3"=1'-0"

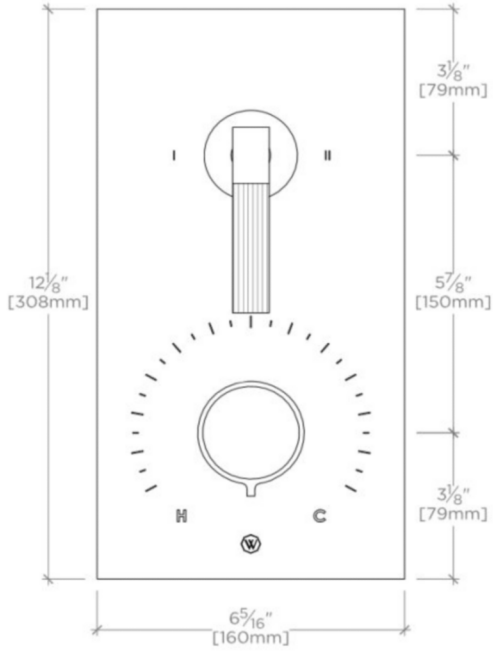

FRONT VIEW SCALE: 3"=1'-0"

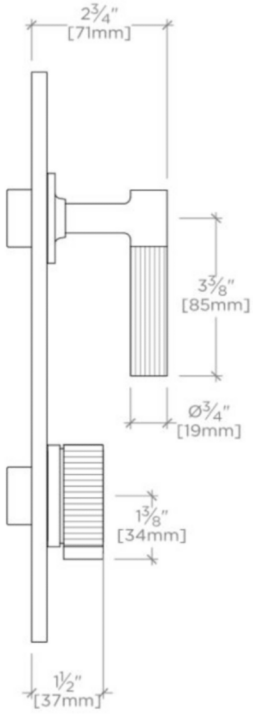

SIDE VIEW SCALE: 3"=1'-0"