# EASTON

# EHS12W

Easton Handshower on Hook with Pearl Handle



SHOWN IN EASTON HANDSHOWER ON HOOK WITH PEARL HANDLE | EHS12W

## TECHNICAL DETAILS

Fittings Hole Diameter: 1 3/8"
Handshower Spray Hose Length: 61"
Inlet Connection Size: 1/2"
Inlet Connection Type: Female NPT
Water Pressure Maximum: 85.0 psi
Water Pressure Minimum: 20.0 psi
Water Pressure Recommended: 45.0 psi

## INSPIRATION

Rooted in classical Edwardian design, Easton is our most expansive collection—offering a comprehensive family of pieces that bring polished detail and timeless tradition to any setting. Revered for its exquisite proportions and impeccable scale, Easton is a trusted choice among designers.

## CODES & STANDARDS

## PRODUCT FEATURES

Earthenware Handle

Features a Fixed Spray Pattern

Showerhead Available in 1.75gpm (6.6L/min) Flow Rate

Stocked in Nickel and Brass

## CERTIFICATIONS

## PRODUCT (NOTES)

# EASTON

EHS12W

Easton Handshower on Hook with Pearl Handle

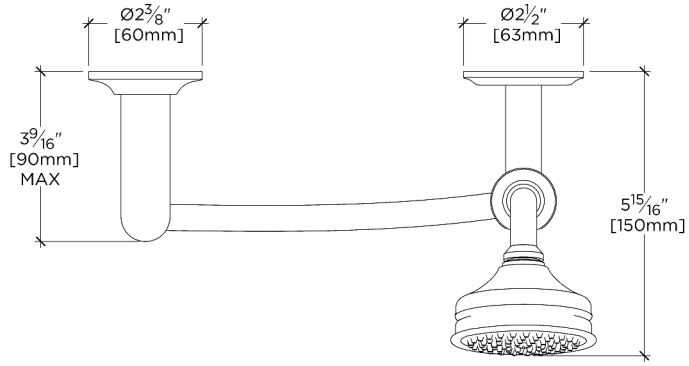


TOP VIEW SCALE: 3"=1'-0"

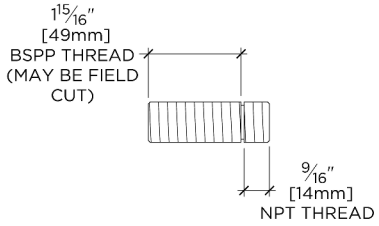


ADAPTER INCLUDED - INTERNATIONAL USE ONLY

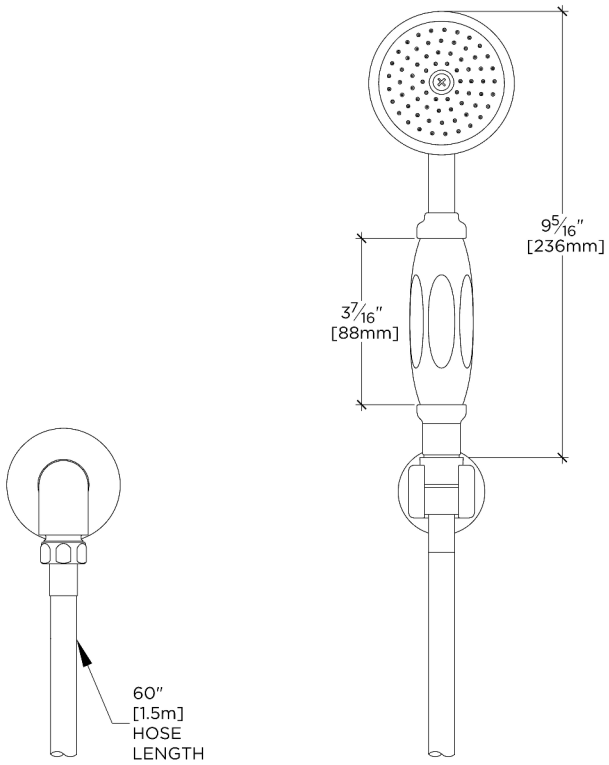


FRONT VIEW SCALE: 3"=1'-0"

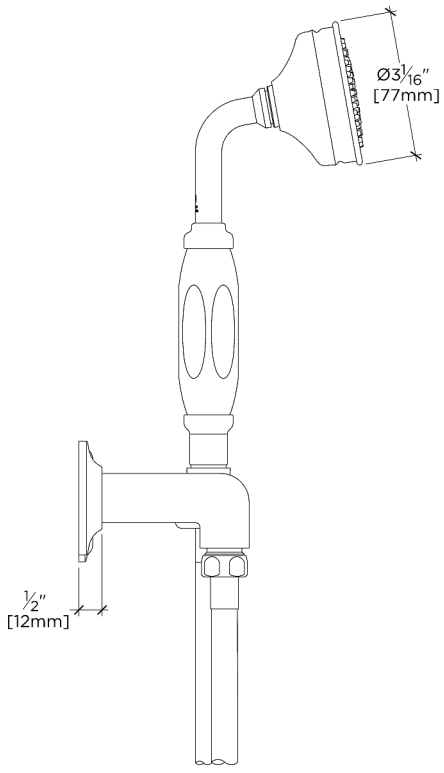


SIDE VIEW SCALE: 3"=1'-0"