EASTON

EHS12W

Easton Handshower on Hook with Pearl Handle



SHOWN IN EASTON HANDSHOWER ON HOOK WITH PEARL HANDLE | EHS12W

TECHNICAL DETAILS

Fittings Hole Diameter: 35 mm
Handshower Spray Hose Length: 1.5 m
Inlet Connection Size: 1/2"
Inlet Connection Type: Female NPT
Water Pressure Maximum: 6.0 bar
Water Pressure Minimum: 1.5 bar
Water Pressure Recommended: 3.0 bar

INSPIRATION

Rooted in classical Edwardian design, Easton is our most expansive collection—offering a comprehensive family of pieces that bring polished detail and timeless tradition to any setting. Revered for its exquisite proportions and impeccable scale, Easton is a trusted choice among designers.

CODES & STANDARDS

PRODUCT FEATURES

Earthenware Handle

Features a Fixed Spray Pattern

Showerhead Available in 1.75gpm (6.6L/min) Flow Rate

Stocked in Nickel and Brass

CERTIFICATIONS

PRODUCT (NOTES)

EASTON

EHS12W

Easton Handshower on Hook with Pearl Handle

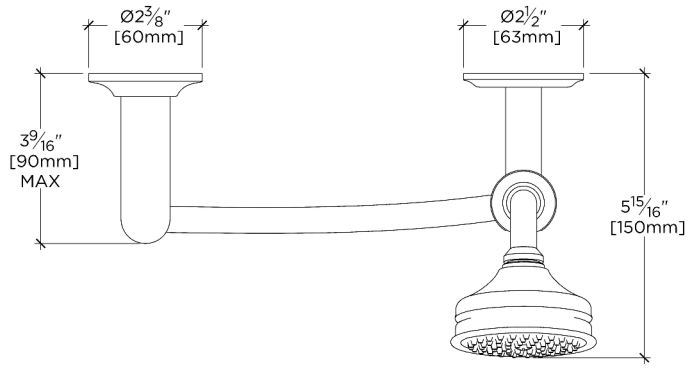

TOP VIEW SCALE: 3"=1'-0"

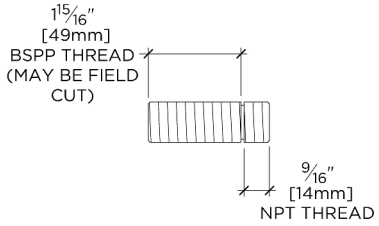

ADAPTER INCLUDED - INTERNATIONAL USE ONLY

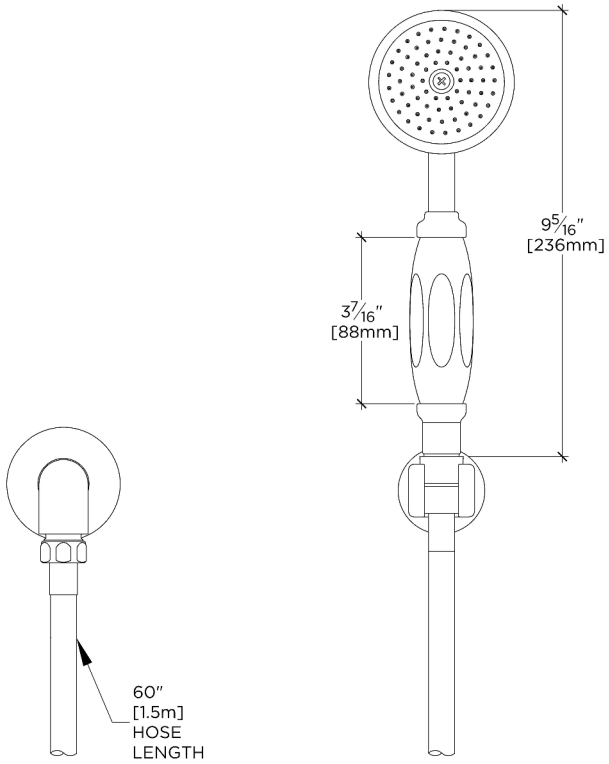

FRONT VIEW SCALE: 3"=1'-0"

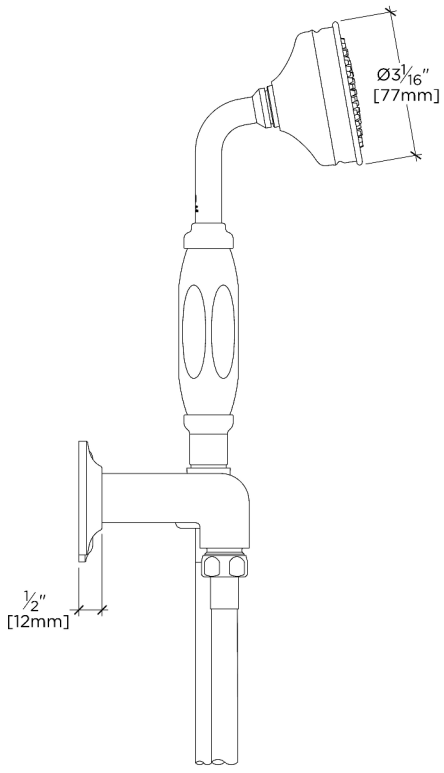

SIDE VIEW SCALE: 3"=1'-0"