INSTALLATION GUIDELINES

ONE HOLE GOOSENECK KITCHEN FAUCET

WATERWORKS

HENRY ONE HOLE GOOSENECK KITCHEN FAUCET WITH LEVER HANDLE AND SPRAY

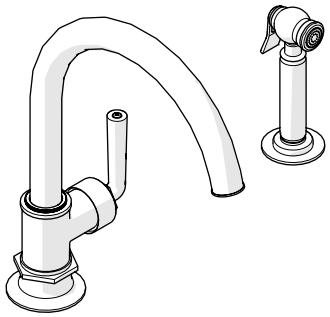

STYLE
HKM211

IMPORTANT:

- To ensure this product is installed properly, you must read and follow these guidelines.
- The owner/user of this product must keep this information for future reference.
- This product must be installed by a professional licensed contractor.
- Be sure your installation conforms to all federal, state, and local codes. In the State of Massachusetts, all installations must comply with the rules and regulations set forth within 248 CMR.
- Inspect this product to ensure you have all the parts required for proper installation.
- This product is **sold partially** assembled but shown fully disassembled for illustrative and service purposes only.
- Flushing the SUPPLY VALVES **(sold separately)** prior to installing the BAR FAUCET is recommended. Flushing can prevent damage to the CARTRIDGE and other internal components.
- Use only a strap wrench or protected/smooth-jaw wrench on any finished surface.
- The use of certain plumber's putty may stain stone or tile surfaces.
- If further assistance is required, please contact Product Support at 1-800-927-2120 Monday through Friday, 8am – 6pm EST.

TECHNICAL DETAILS:

DETAIL	SPECIFICATION
INLET CONNECTION	3/8″ COMPRESSION CONNECTOR HOSES †
SPOUT REACH	9-5/8″ [244mm]
HANDLE TURN RANGE	QUARTER TURN
SPOUT SWIVEL	YES
SPRAY HOSE LENGTH	60″ [1.55m]
WATER PRESSURE RANGE	20psi [1.5 bar] **MINIMUM**
	85psi [6.0 bar] **MAXIMUM**
WATER PRESSURE RECOMMENDED	45psi [3.0 bar]

† For **INTERNATIONAL USE ONLY,** two 9/16"-24 UNEF MALE x 3/8" FEMALE BSPP ADAPTERS (**STYLE No.** UNUK08) and RUBBER WASHERS are provided.

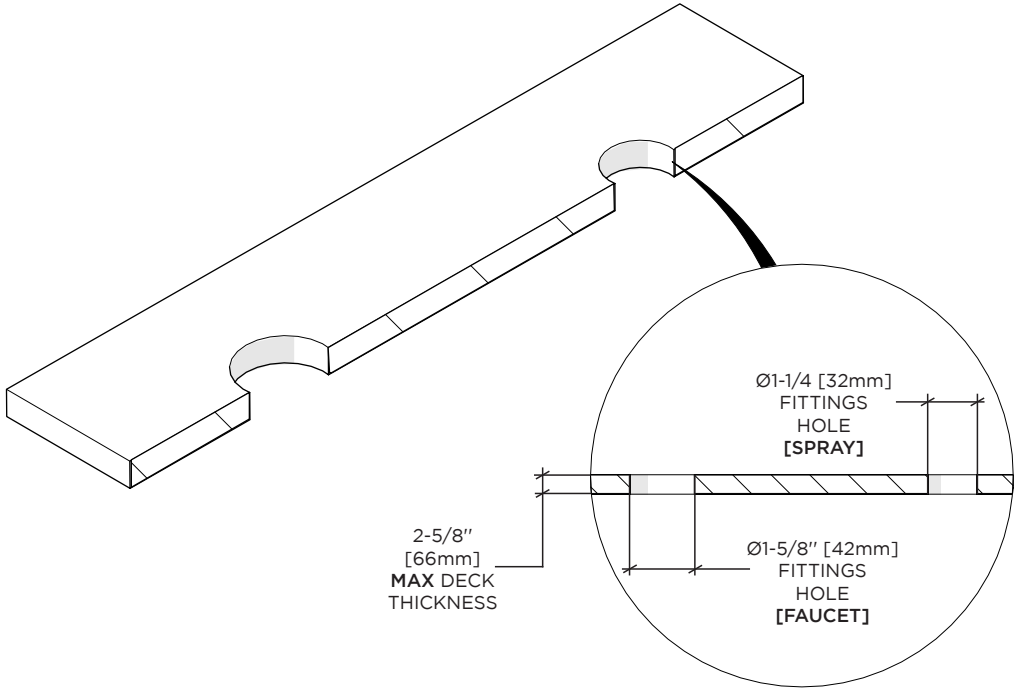

INSTALLATION GUIDELINES

ONE HOLE GOOSENECK KITCHEN FAUCET

WATERWORKS

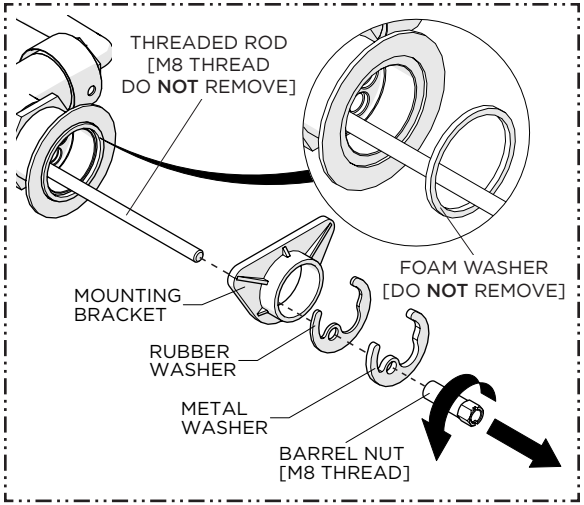

1. Remove the BARREL NUT, METAL WASHER, RUBBER WASHER and MOUNTING BRACKET from the THREADED ROD.

   NOTE: Do **NOT** remove the THREADED ROD or FOAM WASHER beneath the ESCUTCHEON.

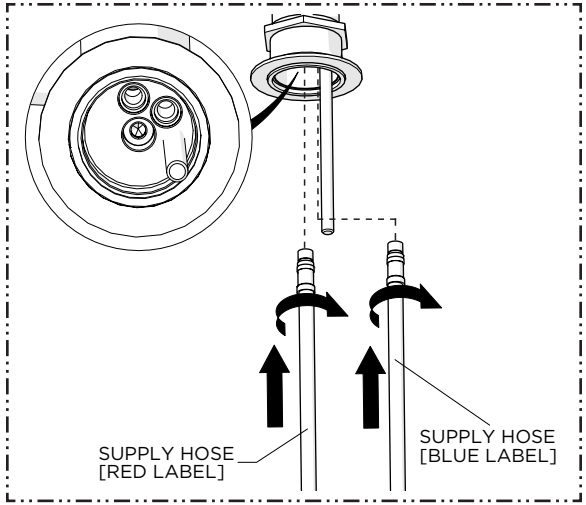

2. Thread and securely tighten the SUPPLY HOSES onto the SPOUT.

   NOTE: The HOSES are M10 x 3/8″ COMPRESSION CONNECTOR HOSES and the TUBES are marked BLUE for cold and RED for hot.

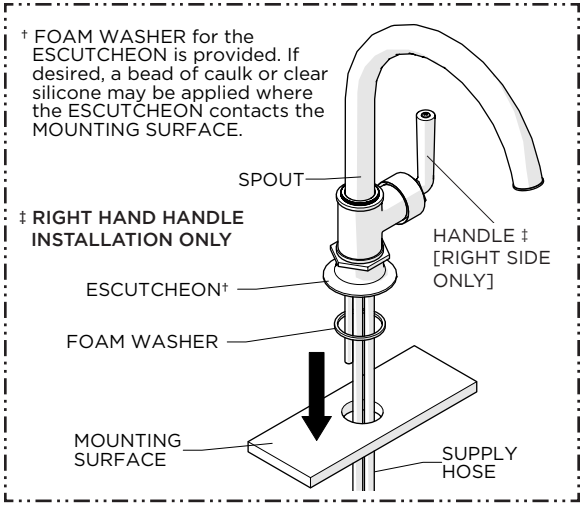

3. Insert the SUPPLY HOSES through the hole on the MOUNTING SURFACE making sure the FOAM WASHER provided is beneath the ESCUTCHEON.

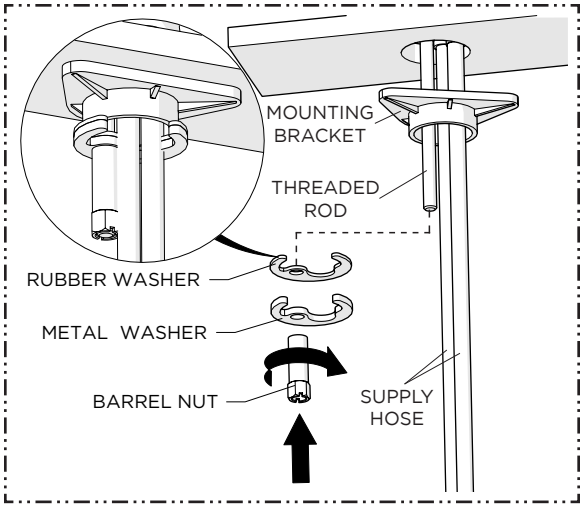

4. Slide the MOUNTING BRACKET, RUBBER and METAL WASHERS back onto the THREADED ROD then thread and securely tighten the BARREL NUT onto the ROD.

   NOTE: Ensure the WASHERS fit properly around the TUBES and HOSE.

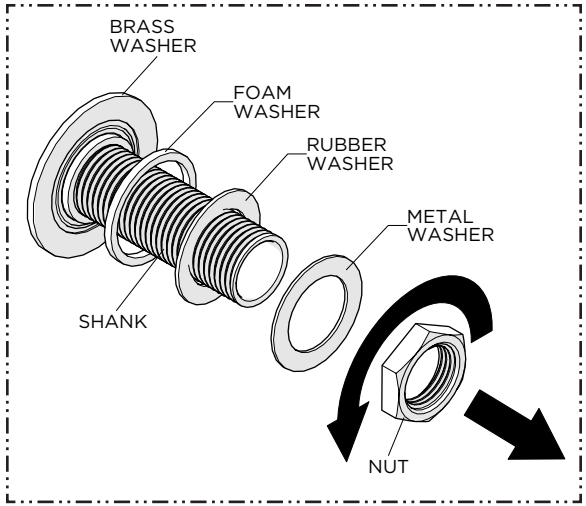

5. Unthread and remove the NUT, METAL WASHER, and RUBBER WASHER from the SHANK.

   NOTE: Do **NOT** remove the RUBBER WASHER beneath the ESCUTCHEON.

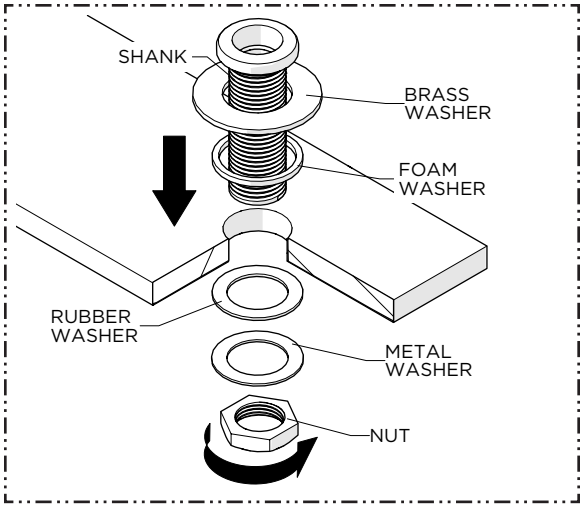

6. Insert the SHANK through the hole on the MOUNTING SURFACE making sure the RUBBER WASHER provided is beneath the ESCUTCHEON then re-install the WASHERS and securely tighten the NUT.

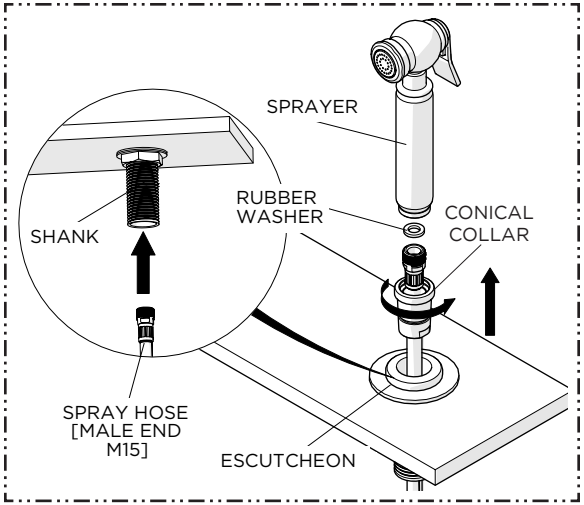

7. Remove the conical from the SPRAYER and slide it down the HOSE coming up from the SHANK and ESCUTCHEON, thread the SPRAYER onto the HOSE with the WASHER, then slide the CONICAL COLLAR up and thread it securely to the SPRAYER.

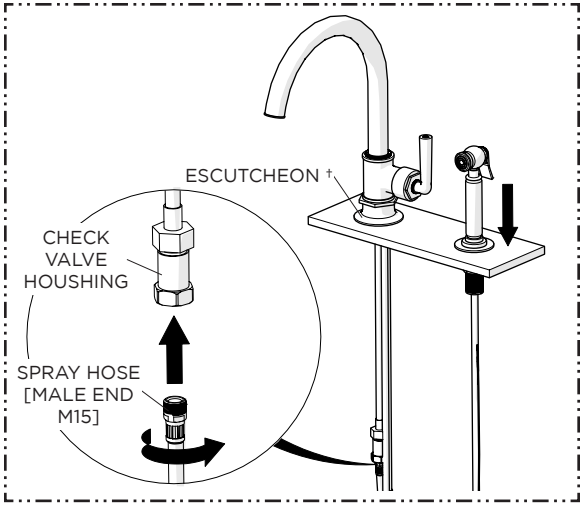

8. Insert the SPRAYER into the ESCUTCHEON until it stops then securely tighten the HOSE end to CHECK VALVE HOUSING.

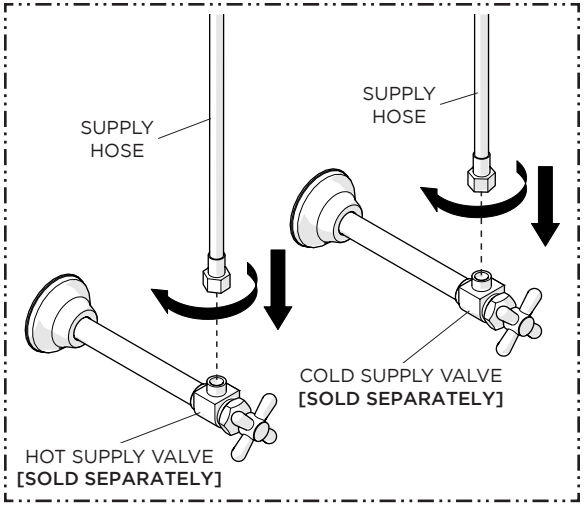

9. Connect the SUPPLY HOSES to the SUPPLY VALVES **[SOLD SEPARATELY].**

   NOTE: The HOSES are connected to SUPPLY TUBES that are marked BLUE for COLD and RED for HOT.

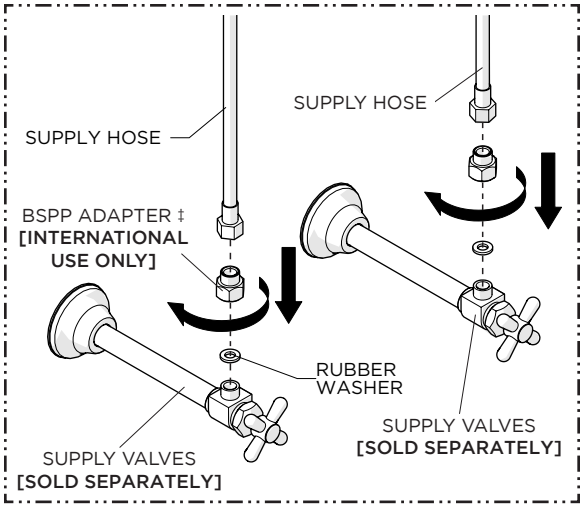

FOR INTERNATIONAL USE ONLY:

10. Using the RUBBER WASHERS provided, thread and securely tighten the BSPP ADAPTERS onto the SUPPLY VALVES then thread and securely tighten the SUPPLY HOSES onto the ADAPTERS.

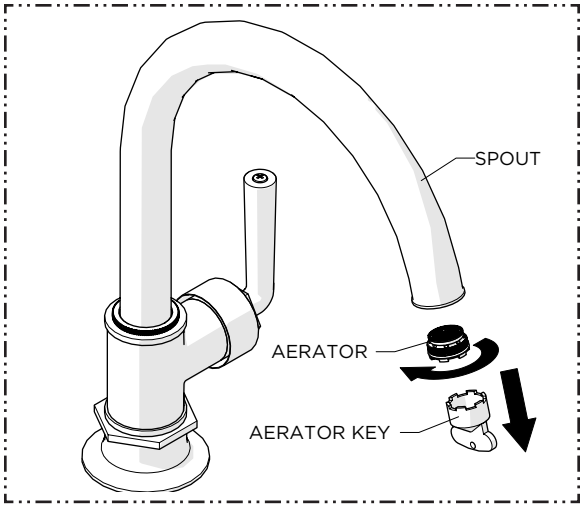

11. Remove the AERATOR from the SPOUT using the tool provided.

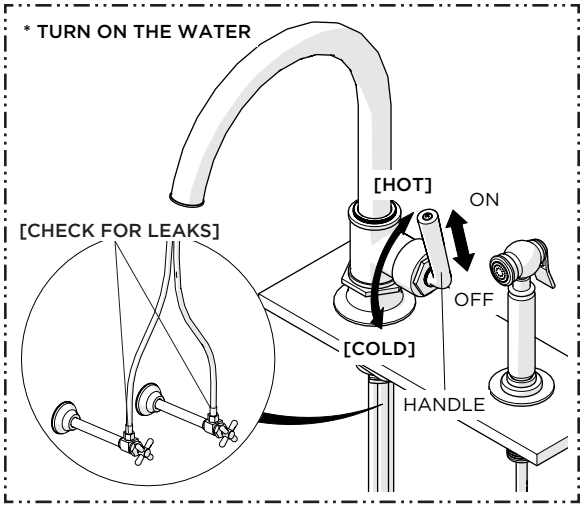

12. Turn on the water and operate the HANDLE to ensure it functions properly and to flush out any debris in the SUPPLY LINES then check all connections for **leaks** and turn off the water.

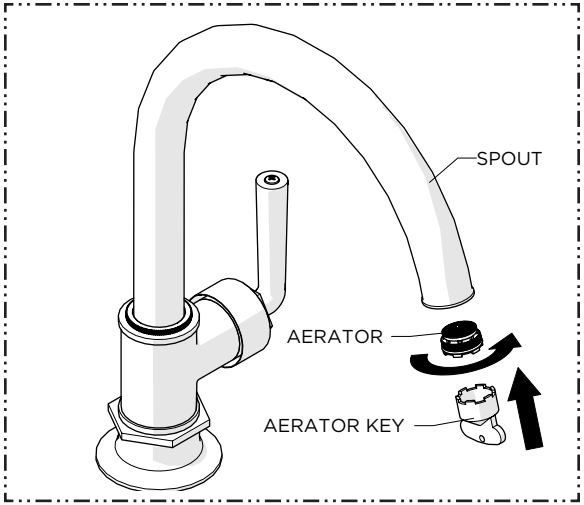

13. Re-install the AERATOR using the tool provided.

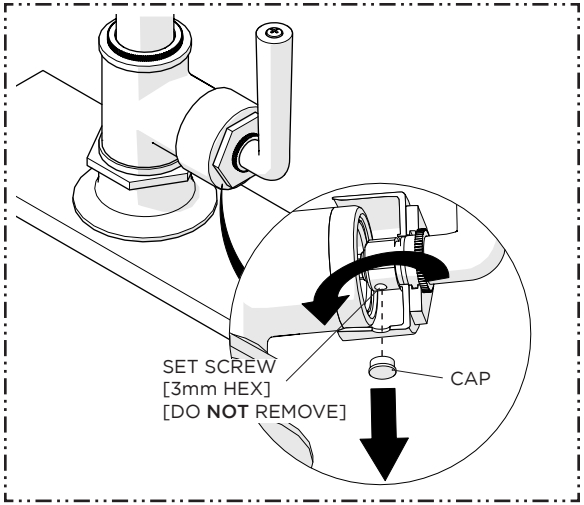

SERVICING THE CARTRIDGE:

1. Remove the CAP at the base of the HANDLE then unthread, but do **NOT** remove, the SET SCREW using the 3 mm HEX KEY.

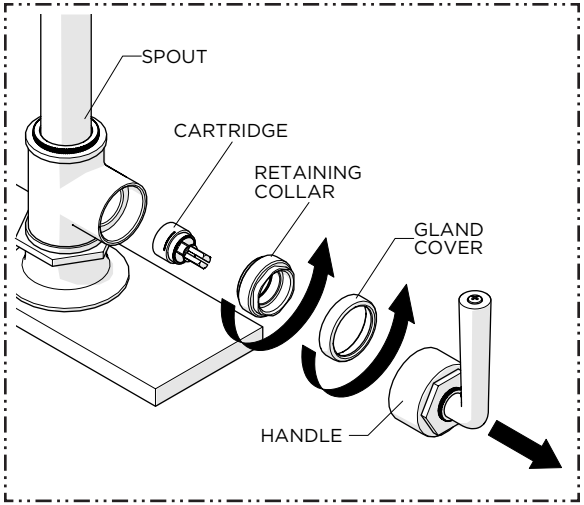

2. Remove the HANDLE, unthread and remove the GLAND COVER, unthread and remove the RETAINING COLLAR then remove the CARTRIDGE.

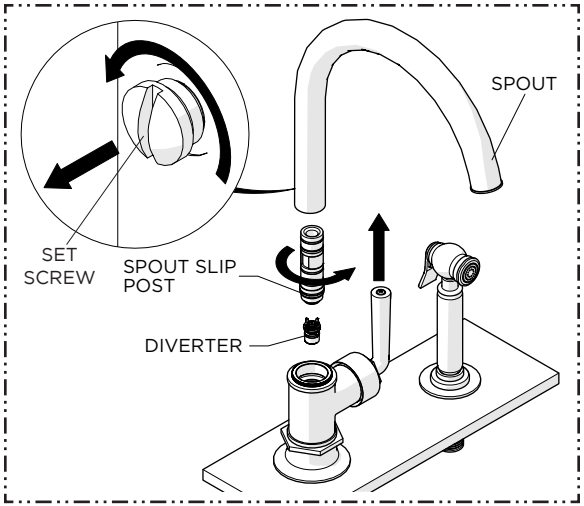

SERVECING DIVERTER:

1. To remove the SPOUT, loosen the SET SCREW behind the SPOUT, then pull the SPOUT up to remove it and unthread the SPOUT SLIP POST to access the DIVERTER.

SERVICE GUIDELINES

ONE HOLE GOOSENECK KITCHEN FAUCET

WATERWORKS

SERVICE PARTS:

	PART No.	DESCRIPTION
	103678	CHECK VALVE KIT
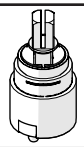	999382	CARTRIDGE
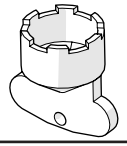	999192	AERATOR KEY
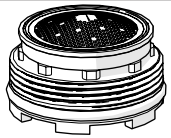	507980	AERATOR
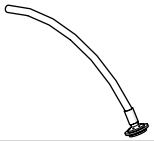	101105	ANTI-DRIP INSERT
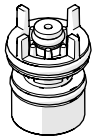	101106	DIVERTER VALVE
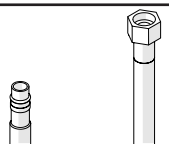	100271	SUPPLY HOSE [M10 MALE x 3/8" COMPRESSION FEMALE (9/16-24 UNEF)]
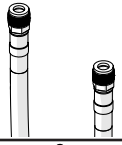	100274	SPRAY HOSE [M15 MALE x M15 MALE]
	100275	MOUNTING HARDWARE KIT

	PART No.	DESCRIPTION
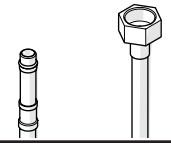	100276	SUPPLY HOSE [M10 MALE x 1/2" FEMALE]
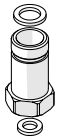	100279	CHECK VALVE HOUSING
	101100	SPOUT SEAL KIT
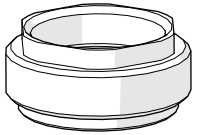	101113	RETAINING NUT
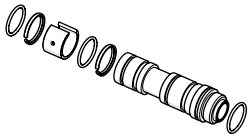	101114	SPOUT SLIP CONNECTION [INCLUDES 101100]
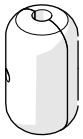	101115	WEIGHT
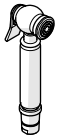	HNU037	SIDE SPRAY
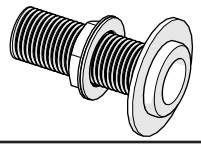	HNU039	SPRAY RETURN

SERVICE GUIDELINES

ONE HOLE GOOSENECK KITCHEN FAUCET
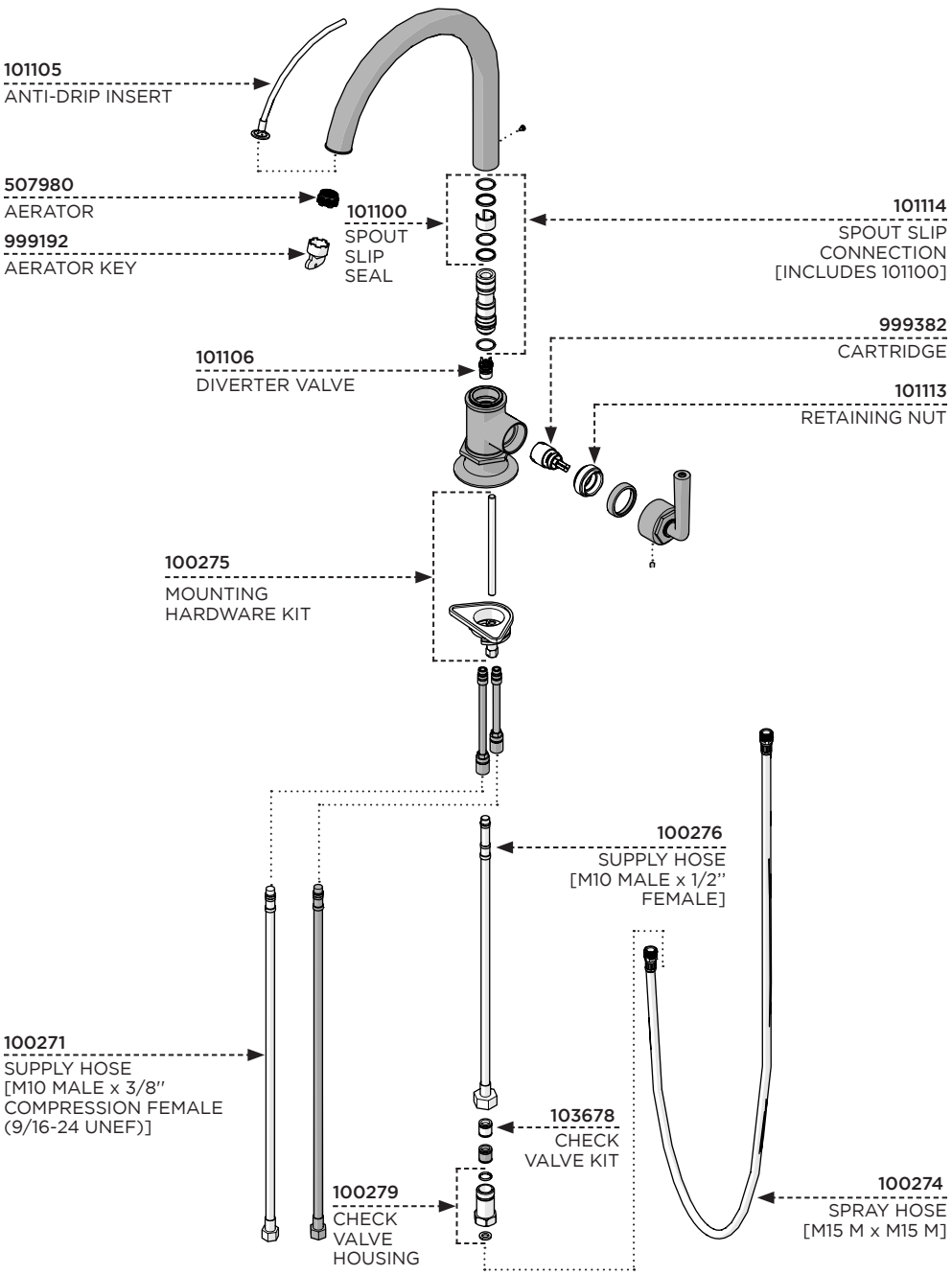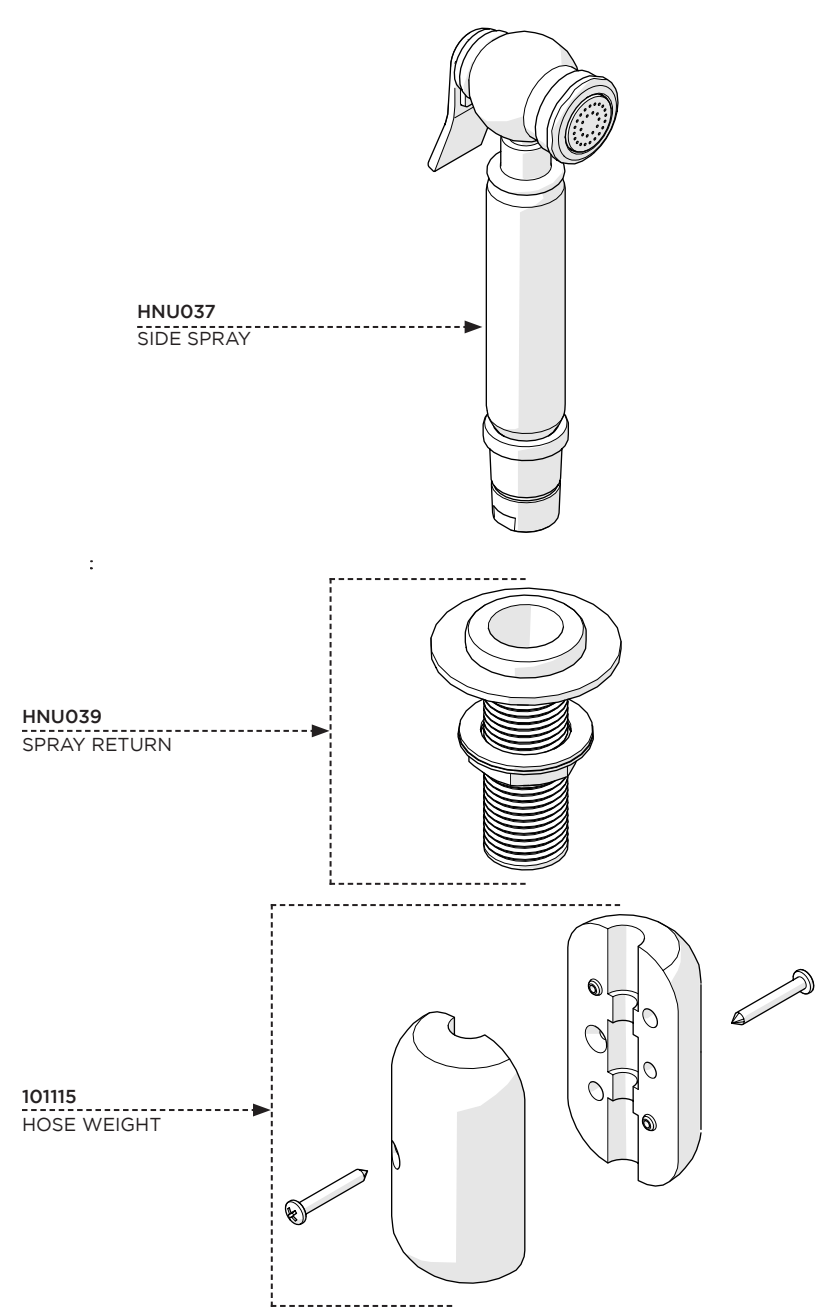
WATERWORKS