CANTEEN

CEKM10

Canteen One Hole High Profile Kitchen Faucet with Oak Lever Handle and Spray



SHOWN IN CANTEEN ONE HOLE HIGH PROFILE KITCHEN FAUCET WITH OAK LEVER HANDLE AND SPRAY | CEKM10

TECHNICAL DETAILS

Adjustable Versus Fixed Spray: Fixed
Deck Thickness Maximum: 2 1/4"
Deck Thickness Minimum: 1/4"
Depth/Width: 11 1/16"
Escutcheon Primary Material: Brass
Fittings Hole Diameter: 1 3/8"
Flow Restriction Options: 2.0, 1.75, 1.5
Handle Turn Angle: Quarter Turn Each Way
Handshower Spray Hose Length: 49"
Height: 11 1/16"
Inlet Connection Size: 3/8"
Inlet Connection Type: Compression Connector Hoses
Installation Type: Deck Mounted
Integrated Diverter: Y
Number Of Holes: One Hole
Primary Material: Brass
Restricted Maximum Flow Rate: 2.2 gpm
Spout Swivel: Y
Spray Included In Unit: Y
Suggested Application: Bar, Kitchen, Laundry
Valve Material: Ceramic
Water Pressure Maximum: 85.0 psi
Water Pressure Minimum: 20.0 psi
Water Pressure Recommended: 45.0 psi

INSPIRATION

Inspired by the clean simplicity of vintage water pumps, Canteen is sized for drama but designed for life. The tall industrial-elegant spout and durable handcrafted oak levers transform a kitchen or bar in timeless, distinctive ways.

CODES & STANDARDS

CEKM10X, NSF/ANSI/CAN 61:Q < 1, NSF/ANSI/CAN 372, CEC, State of MA

PRODUCT FEATURES

Inspired by the clean simplicity of vintage water pumps.

Features a tall, industrial-elegant spout and durable, handcrafted oak levers.

Integrated diverter to divert water to side spray.

Standard flow rate is 2.2gpm (8.3 L/min) and State of California requires a maximum of 1.8gpm(6.8 L/min). Also available in high efficiency flow options. Contact a sales associate for details.

CERTIFICATIONS

PRODUCT (NOTES)

CANTEEN

CEKM10

Canteen One Hole High Profile Kitchen Faucet with Oak Lever Handle and Spray

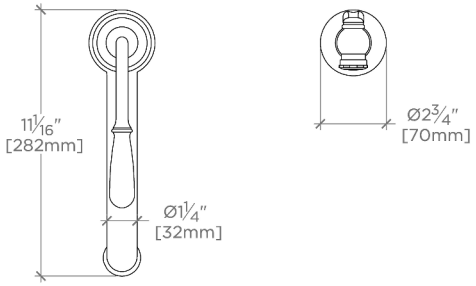

TOP VIEW SCALE: 1½"=1'-0"

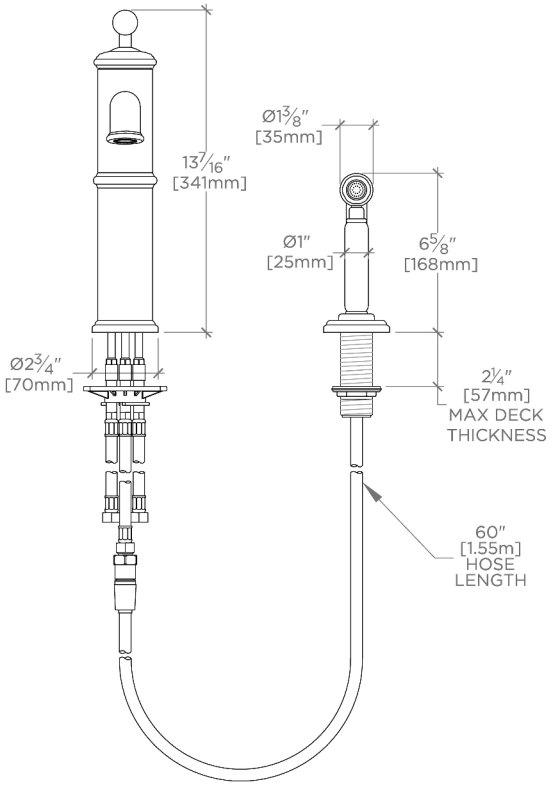

FRONT VIEW SCALE: 1½"=1'-0"

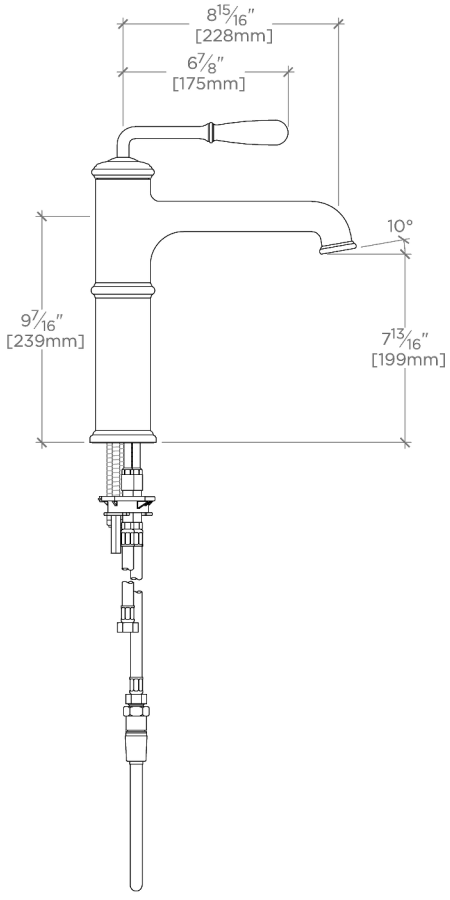

SIDE VIEW SCALE: 1½"=1'-0"