Legacy

LEWS43

Legacy Turned two Legs with 30" Centuria DECK Mounted Marble Lavatory Sink

SHOWN IN LEGACY TURNED TWO LEGS WITH 30" CENTURIA DECK MOUNTED MARBLE LAVATORY SINK | LEWS43

TECHNICAL DETAILS

ADA Compliance: No
Adjustable Levelers Feet: N
Leg Material: Metal
Number Of Legs: Four
Primary Material: Brass
Sink Visibility: N

INSPIRATION

Crafted from turned brass, Legacy offers a versatile and sophisticated look that's grounded in tradition. Solid brass legs, modeled on classical Regency styles, attach seamlessly to the stone countertop or carved sink.

CODES & STANDARDS

PRODUCT FEATURES

Solid Brass

5CM marble top in the Waterworks Cut

Packages available in Brass and Nickel

Includes sink and choice of 5CM stone top in one of our 8 standard offerings

CERTIFICATIONS

PRODUCT (NOTES)

Legacy

LEWS43

Legacy Turned two Legs with 30" Centuria DECK Mounted Marble Lavatory Sink

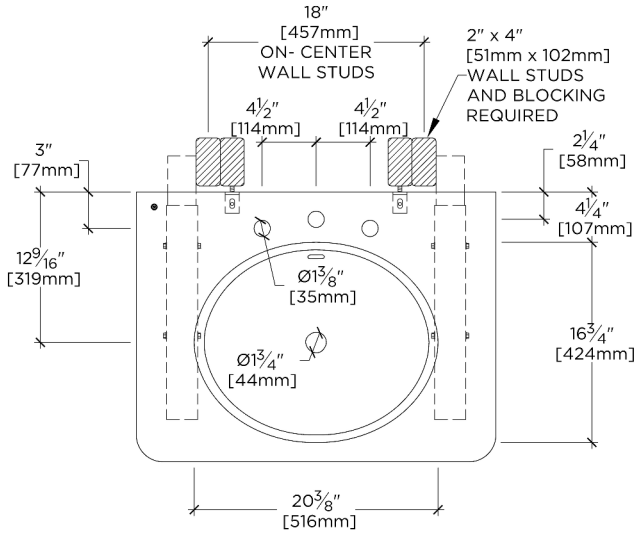

TOP VIEW SCALE: ¾″=1′-0″

REQUIRED MOUNTING HARDWARE (SOLD SEPARATELY)

STYLE: 106803

DESCRIPTION: UNIVERSAL PAIR (L/R) 22″ STAINLESS STEEL ADJUSTABLE CONCEALED SUPPORT BRACKETS, WALL SUPPORT BRACKETS AND HARDWARE FOR WALL MOUNTED STONE SINK.

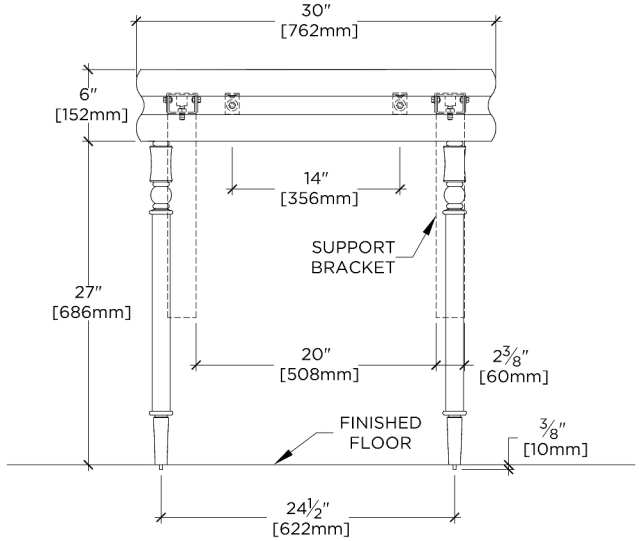

FRONT VIEW SCALE: ¾″=1′-0″

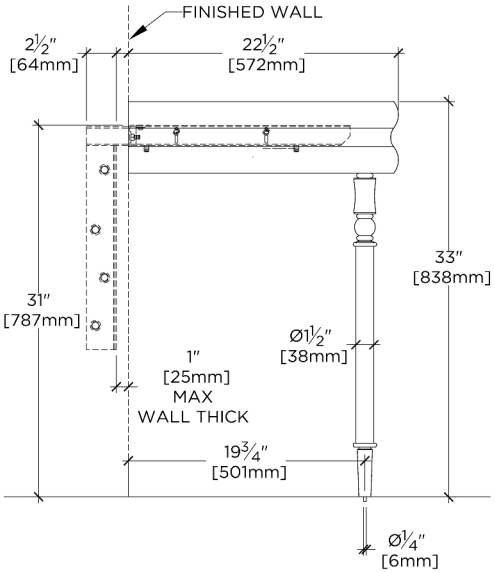

SIDE VIEW SCALE: ¾″=1′-0″