AERO

Wall Mounted Three Piece Paper Holder in Chrome

STYLE No. 823659
REFERENCE No. AEPH19C
ITEM No. 22-37081-61491

DESIGN

FEATURES

SHOWN IN Nickel

WATERWORKS IS A REGISTERED TRADEMARK OF WATERWORKS INC.

AERO

Wall Mounted Three Piece Paper Holder in Chrome

STYLE No. 823659
REFERENCE No. AEPH19C
ITEM No. 22-37081-61491

All dimensions are based on original specifications and are subject to change and variation. Please consult your Design Associate for current specifications.

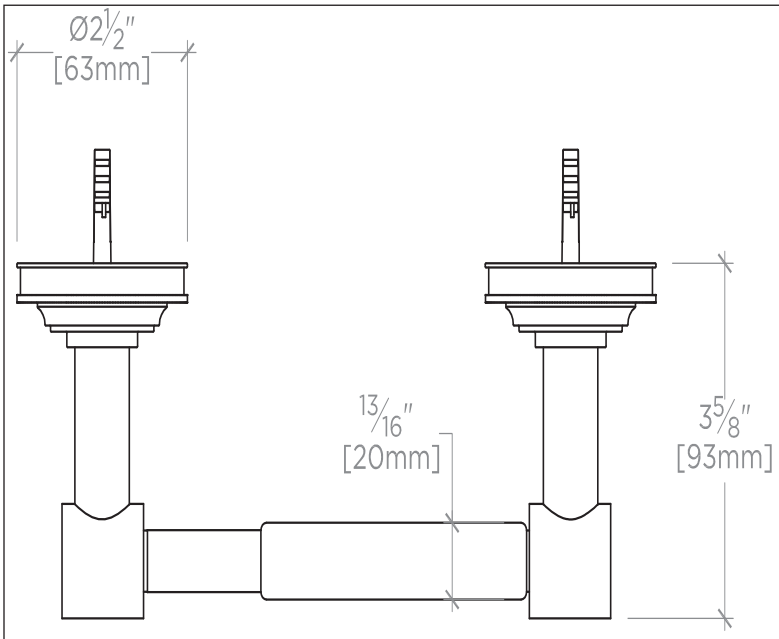

TOP VIEW SCALE: 3"=1'-0"

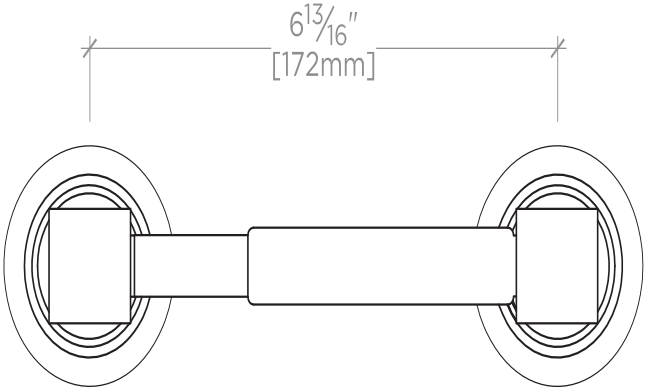

FRONT VIEW SCALE: 3"=1'-0"

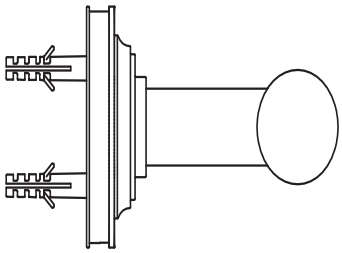

SIDE VIEW SCALE: 3"=1'-0"

WATERWORKS IS A REGISTERED TRADEMARK OF WATERWORKS INC.

AERO

Wall Mounted Three Piece Paper Holder in Chrome

STYLE No. 823659
REFERENCE No. AEPH19C
ITEM No. 22-37081-61491

SPECIFICATIONS

Primary Material: Brass
Adjustable Levelers / Feet:

CARE INSTRUCTIONS

To clean the finish, wipe gently with a soft damp cloth and then with a soft dry towel. A mild soap solution can be used for daily cleaning.

CODES AND STANDARDS

WATERWORKS IS A REGISTERED TRADEMARK OF WATERWORKS INC.