CLASSIC

CL2RAW

Classic 66″ x 34″ x 21″ Right Hand Air and Whirlpool Rectangular Bathtub with End Drain

SHOWN IN CLASSIC 66" X 34" X 21" LEFT HAND AIR AND WHIRLPOOL RECTANGULAR BATHTUB WITH END DRAIN| CLAW2L

TECHNICAL DETAILS

ADA Compliance: No
Assembly / Configuration: One Piece
Bathing Type: Bathing, Soaking and Showering
Drilling Option: None
Electric Requirements: 16" high x 30" wide Access Panel
Depth / Width: 864 mm
Height: 533 mm
Installation Type: Drop In or Undermount
Item Weight (Filled): 328.8542 kg
Length: 1676 mm
Material / Wall Thickness: 11 mm
Number of Holes: Two Hole
Overflow Opening: Yes
Primary Material: Acrylic
Required Electrical Feeds: 120V/15amp Dedicated Line
Single or Double Ended: Single Ended
Suggested Application: Bath

INSPIRATION

Our Classic collection encompasses core elements for every bath. This collection is perfect for all design aesthetics.

CODES & STANDARDS

Code # CLAT20: UL, cUL

PRODUCT FEATURES

Constructed of high density acrylic which is the highest industry standard
The high density acrylic acts as a reinforcement and provided an overall thicker bathtub construction
Microban is built into the acrylic during manufacturing to provide a continuous antimicrobial product protection.

CERTIFICATIONS

PRODUCT (NOTES)

Dimensions of fixtures are nominal. Measure your actual product for rough-in details.

CLASSIC

CL2RAW

Classic 66″ x 34″ x 21″ Right Hand Air and Whirlpool Rectangular Bathtub with End Drain

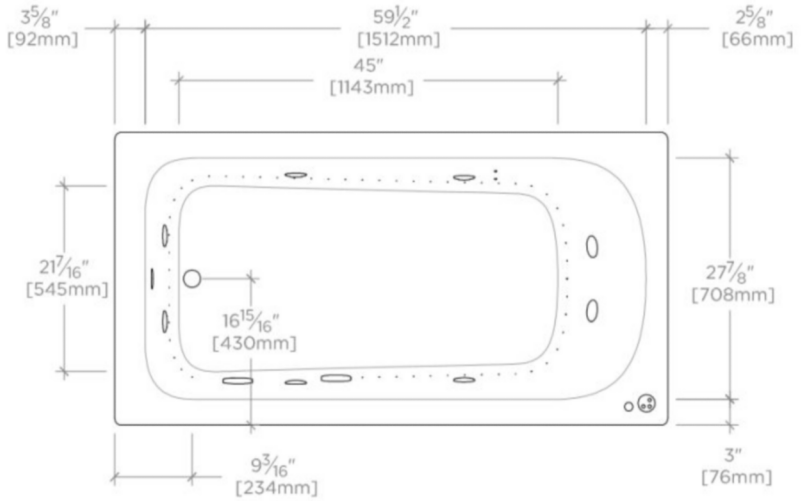

TOP VIEW SCALE: 1/2″=1′-0″

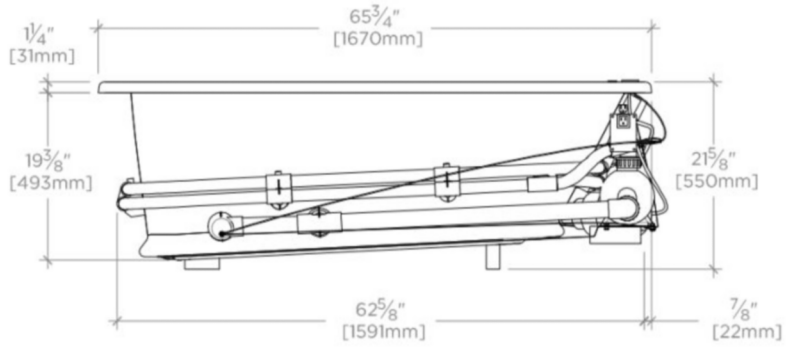

SIDE VIEW SCALE: 1/2″=1′-0″

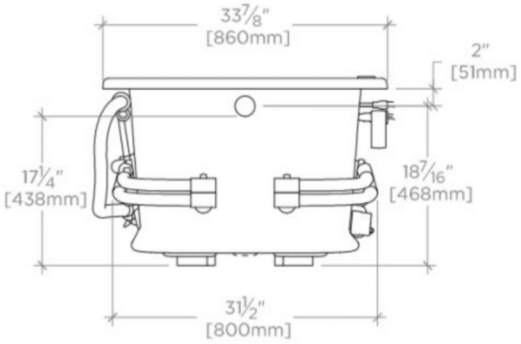

END VIEW SCALE: 1/2″=1′-0″