CLAREMONT

CXBT21

Claremont 70″ x 35″ x 21″ Rectangular Cast Iron Bathtub with Center Drain

SHOWN IN WHITE

TECHNICAL DETAILS

ADA Compliance: No
Assembly / Configuration: One Piece
Bathing Type: Bathing, Soaking and Showering
Bottom Angle / Pitch: 3.0 degree_angle
Drilling Option: None
Depth / Width: 35"
Height: 21"
Installation Type: Freestanding
Item Weight (Filled): 1091.0 pounds
Length: 70"
Material / Wall Thickness: 3/8"
Number of Holes: Two Hole
Overflow Opening: Yes
Primary Material: Cast Iron
Single or Double Ended: Double Ended
Suggested Application: Bath

INSPIRATION

The Claremont tub represents the legacy of cast iron.

CODES & STANDARDS

Code # WWBT21: CSA B45

PRODUCT FEATURES

Our Claremont tub is constructed of the finest cast iron
This tub is available as a drop in or undermount installation
Designed to maximize the interior dimension for bathing comfort with luxurious depth, ergonomic back rest, and form fitting width

CLAREMONT

CXBT21

Claremont 70″ x 35″ x 21″ Rectangular Cast Iron Bathtub with Center Drain

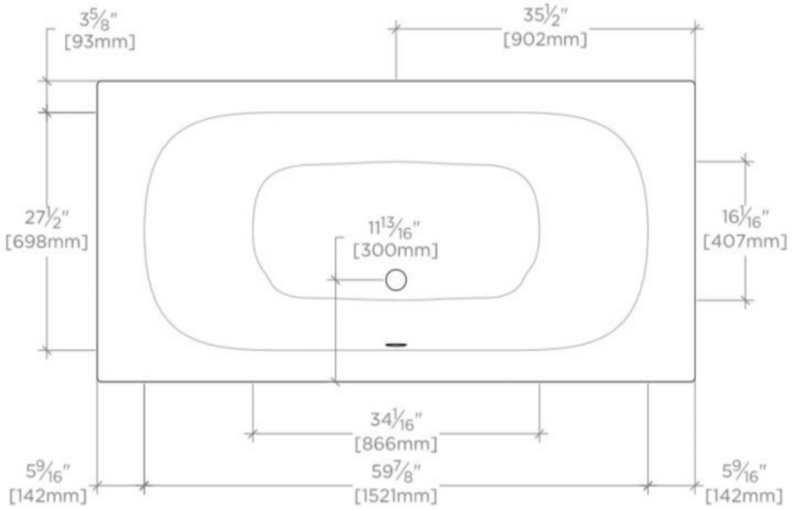

TOP VIEW SCALE: 1/2″=1′-0″

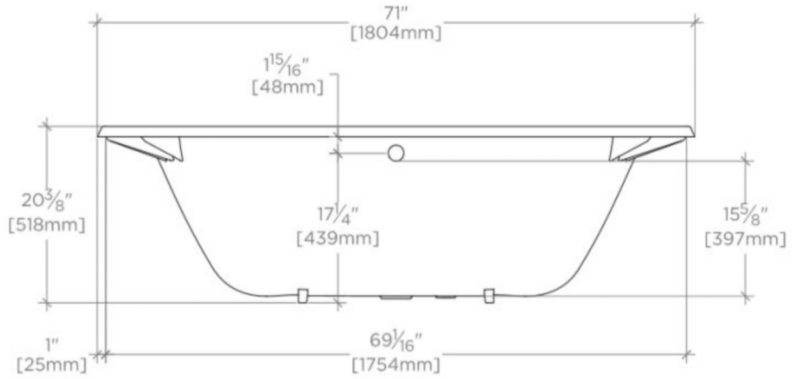

SIDE VIEW SCALE: 1/2″=1′-0″

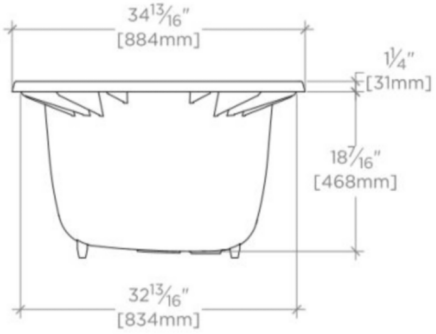

END VIEW SCALE: 1/2″=1′-0″