HENRY

HN01LT

Henry Wall / Ceiling Flush Mount

SHOWN IN HENRY WALL / CEILING FLUSH MOUNT| HNLT01

TECHNICAL DETAILS

Ambient / Task: Ambient
Bulb Base Size: E27
Escutcheon Primary Material: Brass
Bulb Type: E27
Depth / Width: 243 mm
Height: 130 mm
Installation Type: Wall or ceiling mounted
Interior / Exterior Application: Interior Only
Junction Box Orientation: Any
Length: 243 mm
Light Direction: Down or out from the light fixture depending on the orientation when mounted.
Number of Bulbs: One
Orientation: Any
Primary Material: Brass
Safety Warnings: Do not exceed max wattage.
Shade Material: Metal and Glass
Shade Shape: Round
Suggested Application: All Applications
Voltage: 240
Wet / Dry: Damp or Dry

INSPIRATION

Influenced by the connection of industry and art Henry easily transitions between modern, traditional, utilitarian and classic settings.

CODES & STANDARDS

CE

PRODUCT FEATURES

Made of Brass
Ceiling or Wall Mounted
This item is available in Chrome, Nickel, and Unlacquered Brass
Uses (1) 75W Max Type A19 Silver Bowl, E27 Base Bulb

PRODUCT (NOTES)

See UK reference chart. Do not exceed max wattage.

HENRY

HN01LT

Henry Wall / Ceiling Flush Mount

CEILING VIEW SCALE: 3"=1'-0"

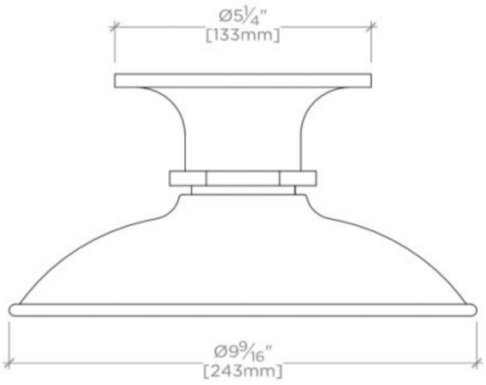

FRONT VIEW SCALE: 3"=1'-0"

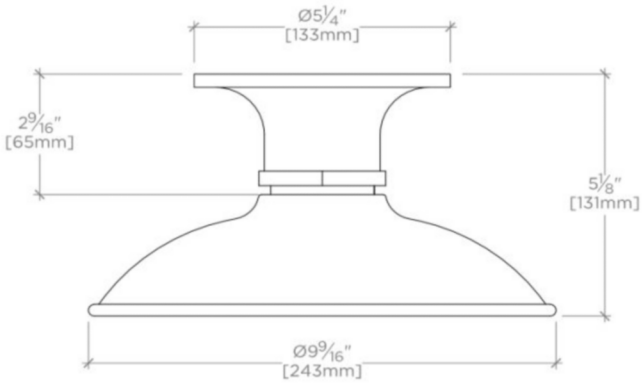

SIDE VIEW SCALE: 3"=1'-0"