RW ATLAS
Volume Control Valve Trim

INSTALLATION GUIDELINES

Metal Wheel Handle
Style No. RWVC01

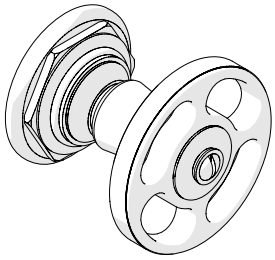

Metal Lever Handle
Style No. RWVC10

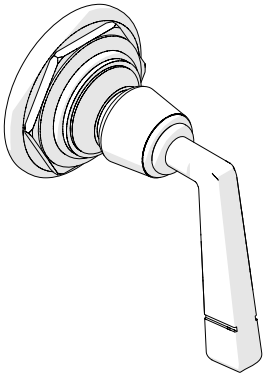

SPECIFICATIONS:

Fitting Hole Diameter: 1-3/8″
Volume Control Valve Rough-In Depth:
GUVC16 or **GUVC17:** 2-1/2″ MIN - 3-1/4″ MAX
2-Way Diverter with Shutoff Valve Rough-In Depth:
GUDV14 (GUSV14R): 3-1/4″ MIN - 4-1/4″ MAX
2-Way Diverter without Shutoff Valve Rough-In Depth:
GUDV23 (GUSV23R): 3-1/4″ MIN - 4-1/4″ MAX

REQUIRED PLUMBING DETAILS:

Universal 3/4″ Volume Control Valve (Clockwise Close)
STYLE No. GUVC16
CODE No. GUSV16R
Universal 3/4″ Volume Control Valve (Counterclockwise Close)
STYLE No. GUVC17
CODE No. GUSV17R
Universal 2-Way Diverter with Shutoff Valve
STYLE No. GUDV14
CODE No. GUSV14R
Universal 2-Way Diverter without Shutoff Valve
STYLE No. GUDV23
CODE No. GUSV23R
Universal 3-Way Diverter with Shutoff Valve
STYLE No. GUDV66
Universal 3-Way Diverter without Shutoff Valve
STYLE No. GUDV65

IMPORTANT:

- To ensure this product is installed properly, you must read and follow these guidelines.
- The owner/user of this product must keep this information for future reference.
- Be sure your installation conforms to federal state, and local codes. In the State of Massachusetts, all installations must comply with the rules and regulations set forth within 248 CMR.
- This product must be installed by a professional licensed contractor and must be onsite prior to rough-in, this allows the installer to visualize the installation.
- Wall valves control on/off/volume and must be installed for each fitting that will have water flowing to it. If using a wall valve with the Universal 3/4″ Thermostatic Valve (Style No. GUTH37R), refer to the Installation Guidelines for the Thermostatic Valve which contains related installation information.
- Inspect this product to ensure you have all the parts required for proper installation.
- Use only a strap wrench or protected/smooth-jaw wrench on any finished surface.
- DO NOT use putty on fittings.

CONTROL VALVE TRIM INSTALLATION WITH VOLUME CONTROL VALVES GUVC16R/17R:

- See Figure - 01 for steps 1 & 2

1. Pull the tile guard off the threaded sleeve from the wall valve rough. Mark the threaded sleeve at the finished wall. Unthread the sleeve and cut 1/2″ behind the mark.
2. Mark the cartridge stems at the wall, then unthread the cartridge from the valve body. Cut the cartridge stems 1/4″ in front of the mark.
3. After the cuts have been made, thread cartridge and handles sleeves back onto valve body.

Figure - 01

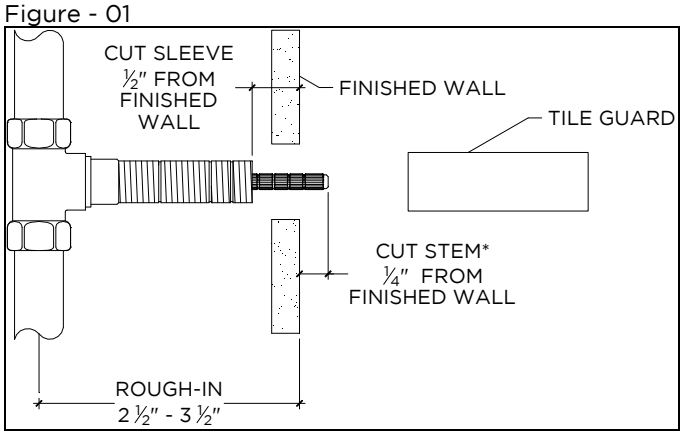

These guidelines have been prepared for the professional contractor to aid in the installation of:
RW ATLAS VOLUME CONTROL VALVE TRIM WITH METAL WHEEL HANDLE (STYLE# RWVC01) & METAL LEVER HANDLE (STYLE # RWVC10)
All dimensions are based on original specification and are subject to change and variation.
Please consult your Design Associate for current specifications.
SEE SERVICE PART DOCUMENT FOR PART ORDERING, AVAILABLE ON WATERWORKS.COM

WATERWORKS

- See Figure - 02 for steps 4 & 5

4. Thread the trim nut to the threaded sleeve until they stop at the finished wall.

5. Install handle assembly by threading it into the trim adapter, making sure the o-ring is behind the escutcheon. Use the handle's knurled piece to get a good grip.

Figure - 02

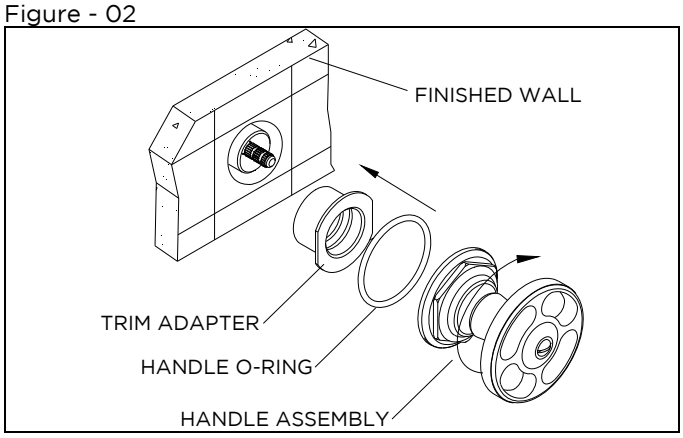

CONTROL VALVE TRIM INSTALLATION WITH 2- WAY or 3-WAY DIVERTER CONTROL VALVES GUDV14R/23R/65/66:

- See Figure - 03 for steps 6 & 7

6. Pull the tile guard off the threaded sleeve on the diverter valve rough. Mark the threaded sleeve at the finished wall. Unthread the sleeve and cut 3/8″ behind the mark.

7. Mark the cartridge stems at the wall, then unthread the cartridge from the valve body. Cut the cartridge stems 3/8″ in front of the mark.

8. After the cuts have been made, thread cartridge and handles sleeves back onto valve body.

Figure - 03

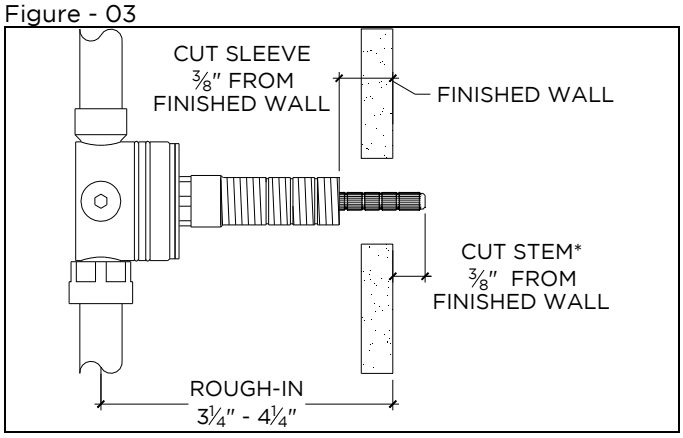

- See Figure - 04 for steps 9 & 10

9. Hold the diverter plate† (SOLD SEPARATELY) up to wall and thread the trim nut onto the threaded sleeve until it stops and secures the plate to the wall.

10. Install handle assembly by threading it into the trim adapter, making sure the o-ring is behind the escutcheon. Use the handle's knurled piece to get a good grip.

Figure - 04

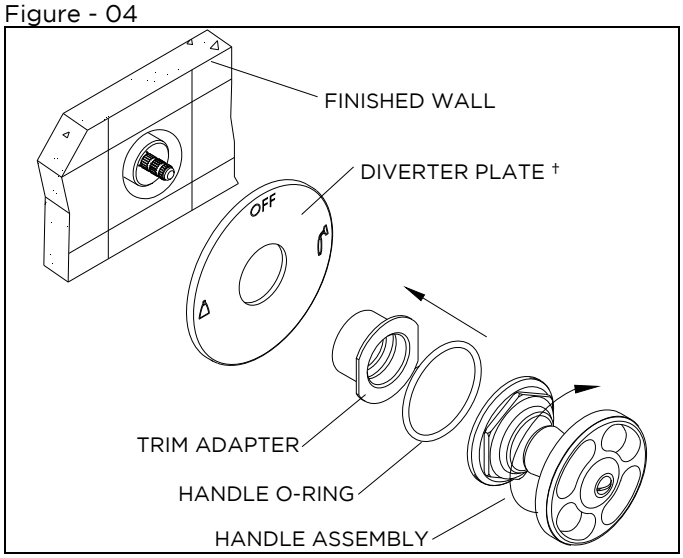

* If required, a 1″ stem extension is available.
Style No. 890831
Item No. 29-72873-53591

† **GUDV14** requires the 2-Way Thermostatic Diverter Valve Trim (Plate Only): **STYLE No. UNDV00**

† **GUDV23** requires the 2-Way Pressure Balance Diverter Valve Trim (Plate Only): **STYLE No. UNDV10**

- **If further assistance is required, please contact Product Support at 1-800-927-2120 (8am-6pm EST).**

- **See service part document for parts ordering, available on WATERWORKS.COM.**

These guidelines have been prepared for the professional contractor to aid in the installation of:
RW ATLAS VOLUME CONTROL VALVE TRIM WITH METAL WHEEL HANDLE (STYLE# RWVC01) & METAL LEVER HANDLE (STYLE # RWVC10)
All dimensions are based on original specification and are subject to change and variation.
Please consult your Design Associate for current specifications.
SEE SERVICE PART DOCUMENT FOR PART ORDERING, AVAILABLE ON WATERWORKS.COM

WATERWORKS