# RW ATLAS

Exposed Thermostatic System with 8″ Shower Rose

# INSTALLATION GUIDELINES

Metal Wheel Handle
**Style No.** RWXS20

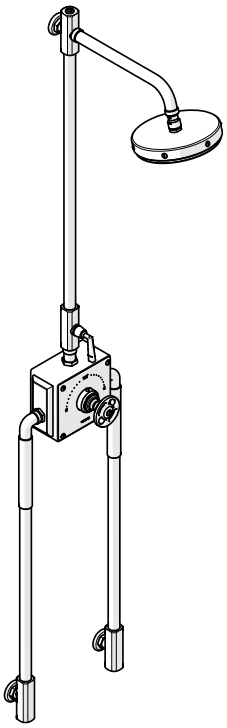

Metal Lever Handle
**Style No.** RWXS30

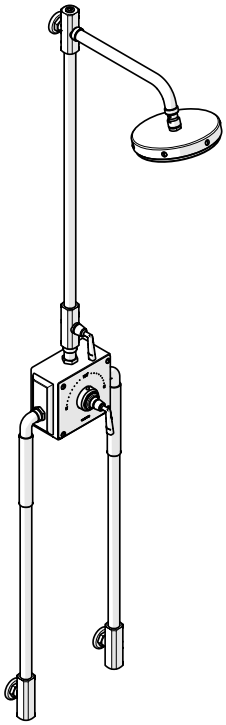

Metal Wheel Handle & Handshower
**Style No.** RWXS40

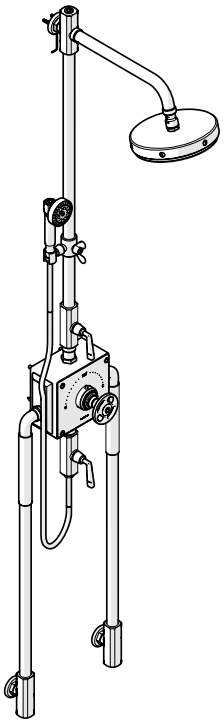

Metal Lever Handle & Handshower
**Style No.** RWXS50

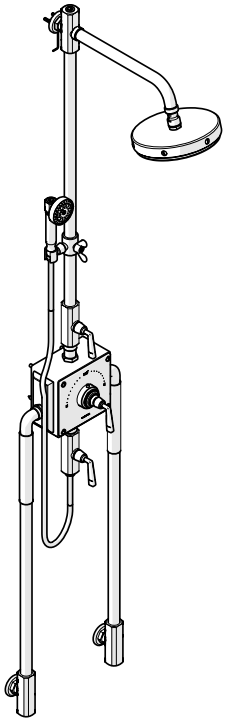

## SPECIFICATIONS:

Connection Type: $^{3}/_{4}$″ Copper Compression
Inlet Spread: 11 $^{1}/_{2}$″ MIN - 11 $^{3}/_{4}$″ MAX
Overall Height 79″ (Adjustable)
Recommended Pressure: 45 psi
Restricted Maximum Flow Rate: 2.5 gpm. For use with automatic compensating valves rated at 2.5gpm.

## IMPORTANT:

- **WARNING: This product is large and heavy and it is strongly recommended that 2 or more persons install this unit.**
- To ensure this product is installed properly, you must read and follow these guidelines.
- The owner/user of this product must keep this information for future reference.
- This product is supplied with the Waterworks Universal Thermostatic Valve (STYLE # GUTH37) which features anti-scald protection. The risk of scalding exists until the installer has properly calibrated/adjusted the temperature setting during final trim installation. Refer to the Installation Guidelines of the thermostatic valve for additional information.
- Be sure your installation conforms to federal state, and local codes. In the State of Massachusetts, all installations must comply with the rules and regulations set forth within 248 CMR.
- This product must be installed by a professional licensed contractor and must be onsite prior to rough-in, this allows the installer to visualize the installation.
- Proper blocking in the wall is required.
- Inspect this product to ensure you have all the parts required for proper installation.
- Use only a strap wrench or protected/smooth-jaw wrench on any finished surface.
- Install accessible hot and cold service stop valves to facilitate servicing.
- DO NOT use putty on fittings.
- Note: The inlet legs are insulated to protect the user from the extreme water temperatures.

## ROUGH IN:

- See Figure - 01 & Figure - 02 for Steps 1-3.
- **Determine the ideal location of the valve and inlet legs, based on user preference. The distance from the center of the valve to the inlet connections is 32-5/8″.**

These guidelines have been prepared for the professional contractor to aid in the installation of:
RW ATLAS EXPOSED THERMOSTATIC SYSTEM WITH 8″ SHOWER ROSE WITH METAL WHEEL OR LEVER HANDLE & WITH HANDSHOWER (STYLE #'S RWXS20, RWXS30, RWXS40 & RWXS50).
All dimensions are based on original specification and are subject to change and variation.
Please consult your Design Associate for current specifications.
**SEE SERVICE PART DOCUMENT FOR PART ORDERING, AVAILABLE ON WATERWORKS.COM**

WATERWORKS

- **Make sure there is enough clearance after the floors and walls have been finished in the shower area.**

1. Run well supported 3/4″ hot and cold copper supply lines for maximum flow.

2. Verify the supplies are secure and level. The inlets must have a spread of 11-1/2″MIN to 11-3/4″MAX. Make sure the hot supply is on the left and the cold supply is on the right. Cap off supplies and outlet and check for leaks.

3. Cut the copper supply lines so they extend 15/16″ from the finished wall. (See Figure - 02).

Figure - 01

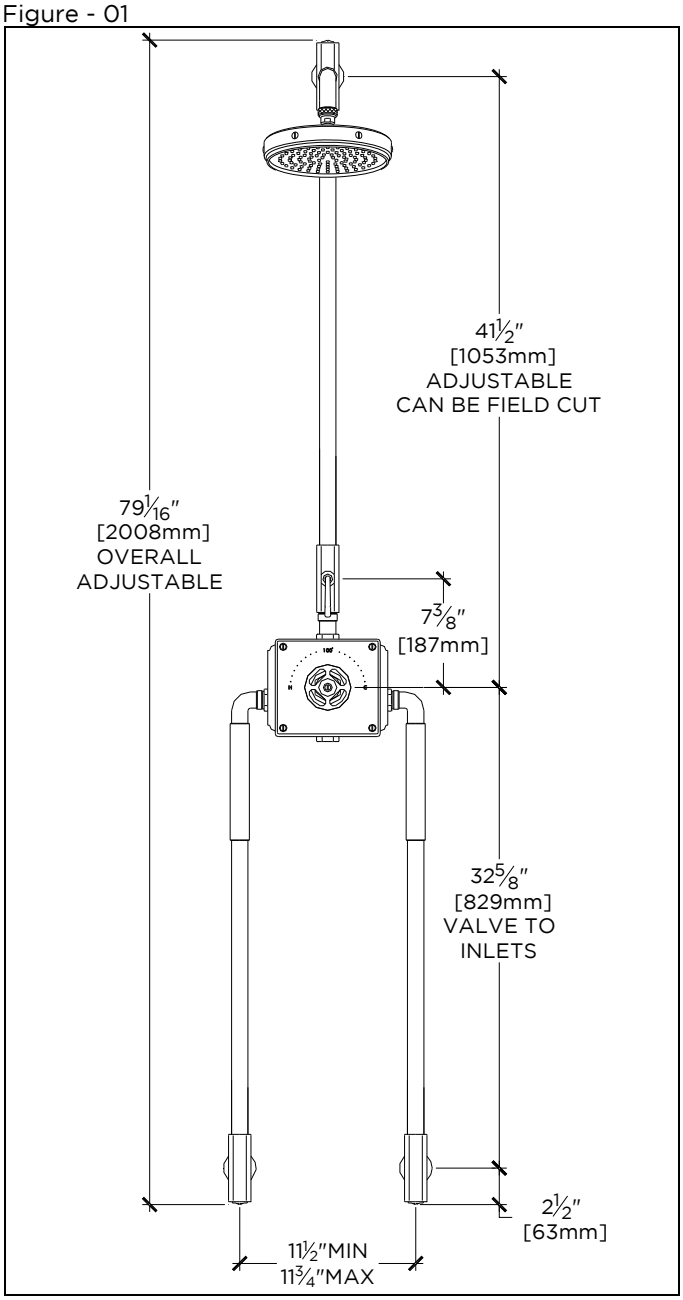


Figure - 02

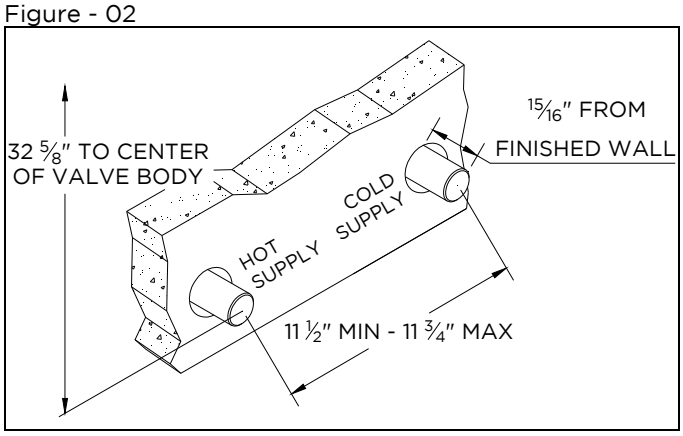


## EXPOSED VALVE INSTALLATION:

- See Figure - 03 for Steps 5-12.

- **Note: This installation step will require 2 persons.**

4. Unthread and remove the compression nuts and compression rings, along with escutcheons and o-rings from each inlet connection.

5. Slide the o-ring, escutcheon, compression nut and compression ring over each inlet supply pipe, making sure the threading on the compression nut is facing outwards.

6. Loosen the knurled collars and thread the inlet legs into the valve body until they stop, then un-thread enough so that they align with the supply pipes and outlet tube (MAXIMUM 3 ROTATIONS). Note that the elbow seal is created by internal o-rings and NOT by fully tightening the elbow.

7. Position the inlet legs onto the supplies along with the valve body until they are fully seated into the elbow and then hand tighten the compression nuts. Slide the escutcheon back towards the wall; and if the gap is too large, as to where the escutcheon slides off the compression nut, cut the supply pipes accordingly.

8. With the valve body level and up against the wall, mark the 4 mounting hole locations through the holes that are on the back plate of the valve body.

9. Loosen the compression nuts and remove the inlet legs and valve body.

10. Drill the wall for the 4 wall anchors provided and install them.

11. Re-install the inlet legs along with the valve body onto the supply pipes, then , using a wrench, tighten the compression nuts fully. Tighten the knurled collars so that they are tight against the side of the valve body. Make sure the escutcheons are against the wall, with the o-ring behind it.

12. Install the screws, through the valve body and into the wall anchors to fully secure the assembly.

Figure - 03

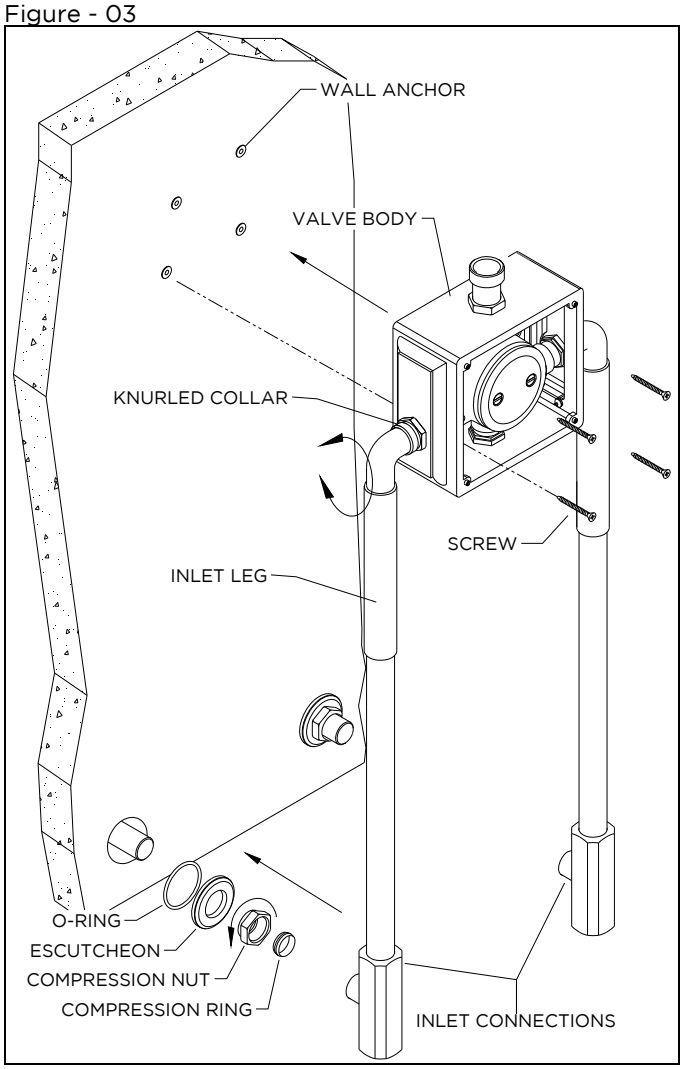


## WALL VALVE/RISER/SHOWER ARM INSTALLATION:

➢ See Figure - 04 for Steps 13-16.

13. After the exposed valve body and inlets are fully installed, connect the wall valve using the knurled nut on the top of the valve body, making sure the rubber washer is between. Once the knurled nut fully tightened, make sure the wall valve if facing forwards and then tighten the hex nut on top of the valve body.

14. Place shower riser with shower arm assembly onto the top of the wall valve, making sure the riser tube is fully seated into the wall valve and shower arm mount.

15. Mark the center location of the shower arm mount. **If the shower arm assembly is too high, the riser tube can be field cut to the desired height.**

16. If you are installing a Handshower, available on Style# RWXS40 & RWXS50 only, attach handshower slider to the shower riser and tighten the wing-nut.

Figure - 04

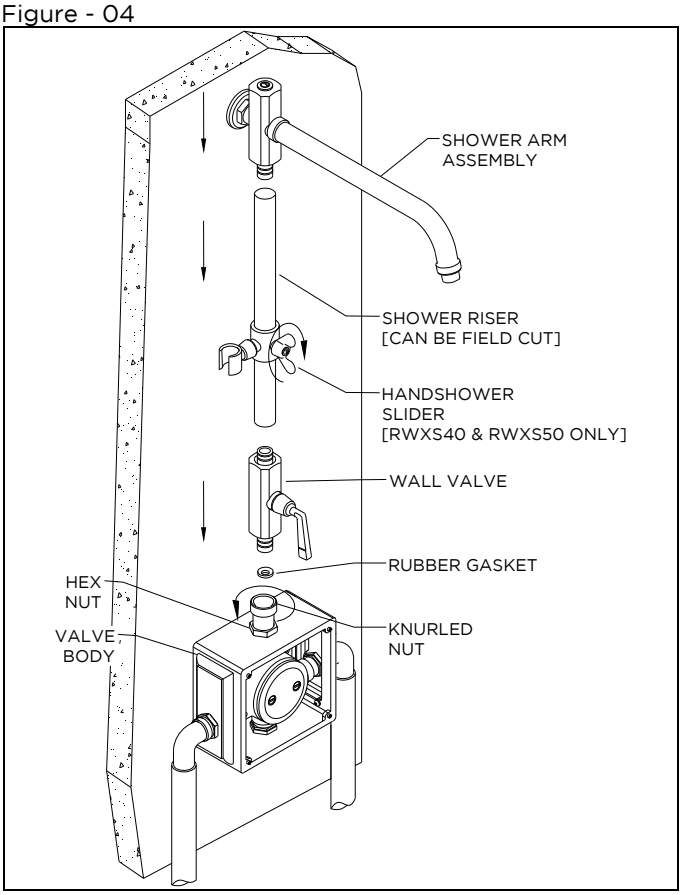


➢ See Figure - 05 for Steps 17-20.

17. Remove the shower arm assembly from the riser tube and remove the wall mount plate and set screw from the escutcheon.

18. Install the wall mount plate at the center mark made in Step 15, using the screws and anchors.

19. Carefully install shower arm assembly back onto shower riser, while aligning the shower arm escutcheon over the wall mount plate. NOTE: Adjusting the shower riser may help with this step.

➢ **WARNING: MAKE SURE THE RISER TUBE IF FULLY SEATING IN BOTH THE WALL VALVE AND THE SHOWER ARM MOUNT IN ORDER TO PREVENT ANY LEAKS. ADJUST MOUNT IF NECESSARY.**

20. Once the shower arm assembly is fully seated on the shower riser and mounted on the wall plate, use the set screw to secure shower arm assembly.

Figure - 05

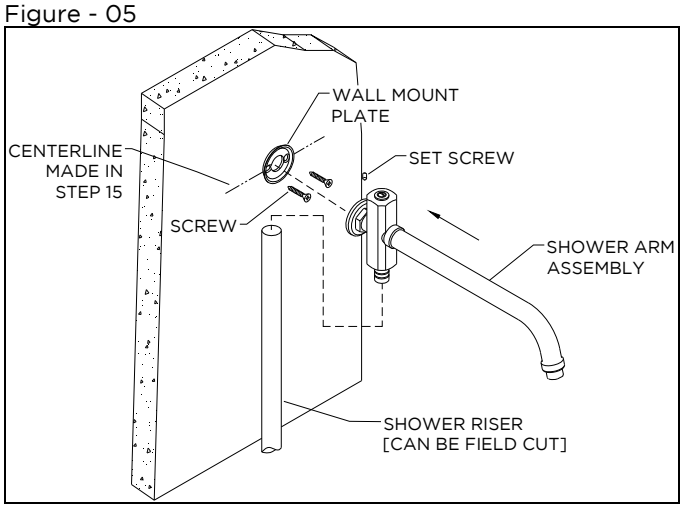


## HANDSHOWER INSTALLATION (RWXS40 & 50 ONLY):

- See Figure - 06 for steps 21 - 23.
- Maximum Flow Rate: 2.5 gpm, For use with automatic compensating valves rated at 2.5gpm.

21. Connect the handshower wall valve using the knurled nut on the bottom of the valve body, making sure the rubber washer is between. Once the knurled nut fully tightened, make sure the wall valve if facing forwards and then tighten the hex nut on bottom of the valve body.
22. Connect the knurled end of the handshower hose to the bottom of the handshower wall valve. Connect the conical end of the handshower hose to the bottom of the handshower.
23. Place handshower into the clip on the slider, previously installed in Step 16. Note: The handshower slider is adjusted by loosening the wing-nut on the slider and then retightening at the desired height.

Figure - 06

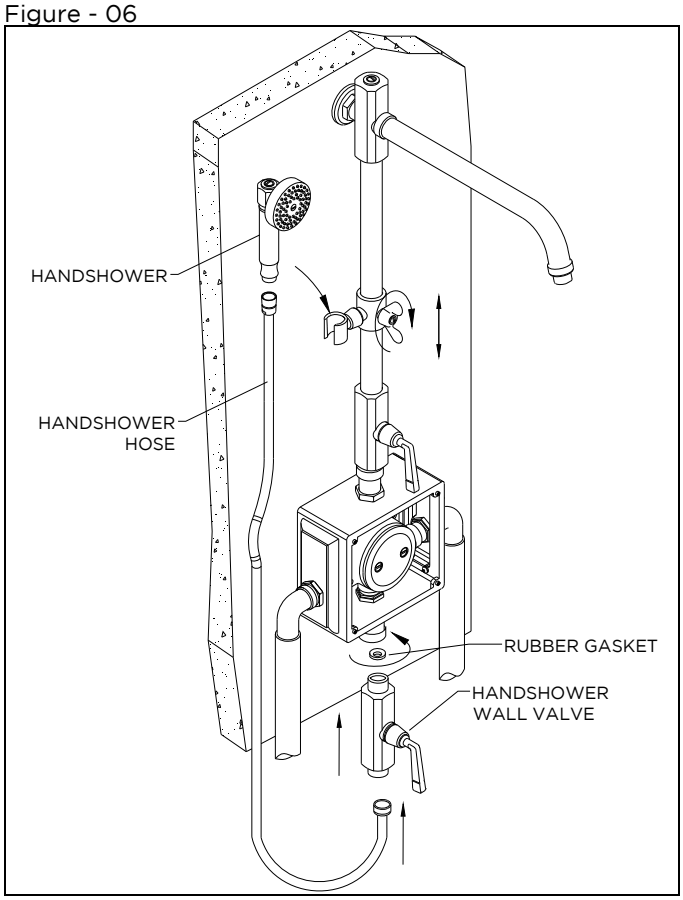


## FLUSH OUT THE SYSTEM:

- The supply lines must be flushed out to prevent clogging of the filter screens. Failure to flush the lines will permanently damage the cartridge and void the warranty.
- See Figure - 07 for Steps 24-28.

24. The exposed wall valve comes pre-installed with the flush plate and is ready for flushing the lines.
25. Remove the shower head and/or handshower (any fitting with a flow regulator).
26. Turn on the water supply to flush out the lines, then inspect all connections for leaks.
27. After all the lines are flushed, turn off the water supply and remove the flush plate.
28. Install the cartridge using the 2 cover screws and turn the service stops off.

Figure - 07

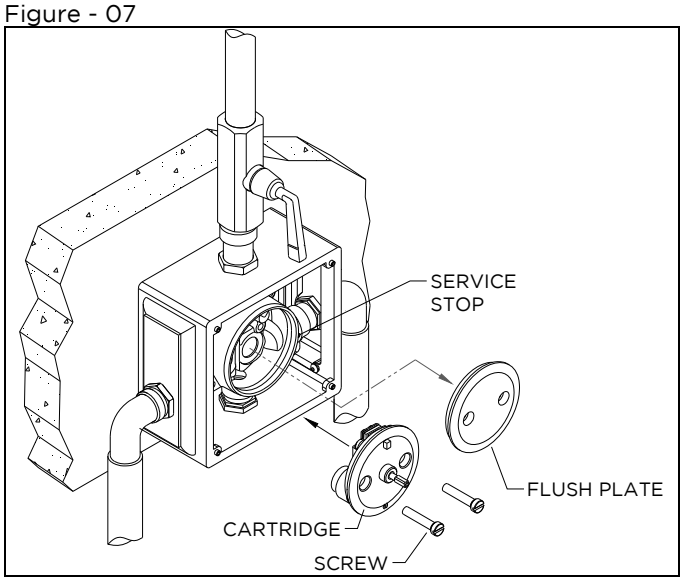


## TRIM PLATE INSTALLATION:

- See Figure - 08 for steps 29 - 31.

29. Attach trim plate to valve body using the 4 screws, making sure the gasket is behind the plate. Note: USE A LARGE SLOTTED SCREWDRIVER TO AVOID DAMAGING SCREWS.

30. Thread the all thread adapter onto the cartridge until it stops and insert the square tube over the cartridge stem.

31. Thread the trim nut onto the all thread adapter until it stops. Note: DO NOT OVER-TIGHTEN.

Figure - 08

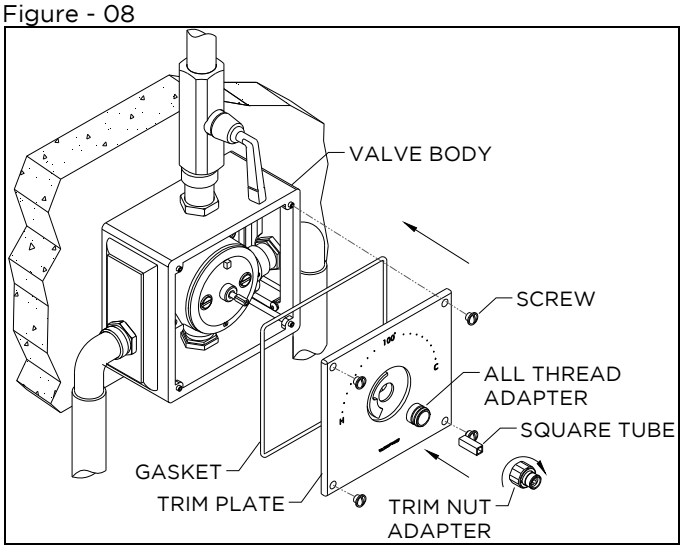


## TEMPERATURE CALIBRATION:

- The risk of scalding exists until the installer has properly calibrated the temperature setting.

- See Figure - 09 for steps 32 - 36.

32. Turn on the water supply and a wall valve to run water through the valve and insert a bladed screw driver into the square tube.

33. Slowly rotate the square tube clockwise to attain full cold, then rotate it counter-clockwise to attain full hot. Verify a full range of temperature exists. Note: It is approximately 2 complete rotations from full cold to full hot.

34. With water running, rotate the square tube to adjust the temperature to the maximum desired bathing temperature, verified with a thermometer. Turn the water off and make sure not to change this temperature setting.

35. Unthread the handle assembly from the limit stop assembly and loosen the 4 set screws on the limit stop.

36. Insert the limit stop assembly onto the trim nut making sure the limit stop pin (shown removed) makes contact with the limit stop on the trim plate, then tighten the 4 set screws.

Figure - 09

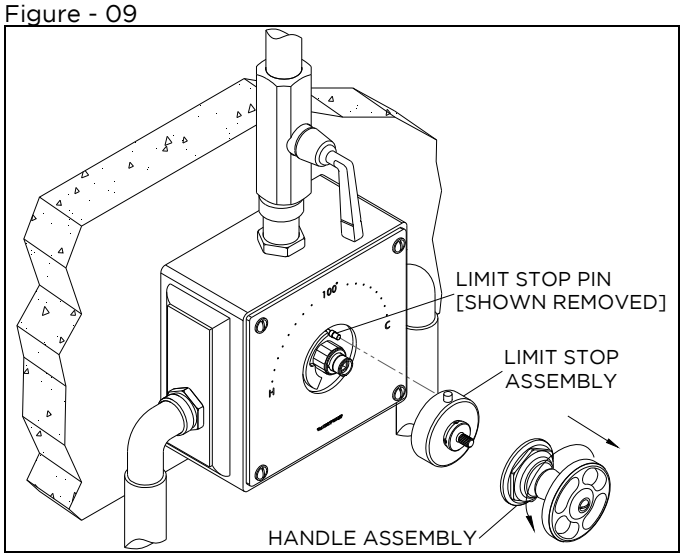


These guidelines have been prepared for the professional contractor to aid in the installation of:
RW ATLAS EXPOSED THERMOSTATIC SYSTEM WITH 8" SHOWER ROSE WITH METAL WHEEL OR LEVER HANDLE & WITH HANDSHOWER (STYLE #'S RWXS20, RWXS30, RWXS40 & RWXS50).
All dimensions are based on original specification and are subject to change and variation.
Please consult your Design Associate for current specifications.
**SEE SERVICE PART DOCUMENT FOR PART ORDERING, AVAILABLE ON WATERWORKS.COM**

WATERWORKS

INSPECT THE INSTALLATION:

37. Turn the limit stop clockwise then turn the water on and confirm the limit stop is functioning properly by turning it counter-clockwise at which point it should stop.

38. Verify the temperature to be the maximum temperature set in Step 34. If it is not the correct temperature, repeat the calibration procedures in Steps 32-36.

39. To get a hotter temperature, press and hold the limit stop button, then rotate the limit stop until it stops. It is NOT recommended to exceed a safety limit stop of 110 degrees.

40. Re-attach the handle assembly to the limit stop.

41. Attach the shower head to the shower arm assembly using Teflon tape and the rubber washer to complete this installation. (See Figure - 10)

Figure - 10

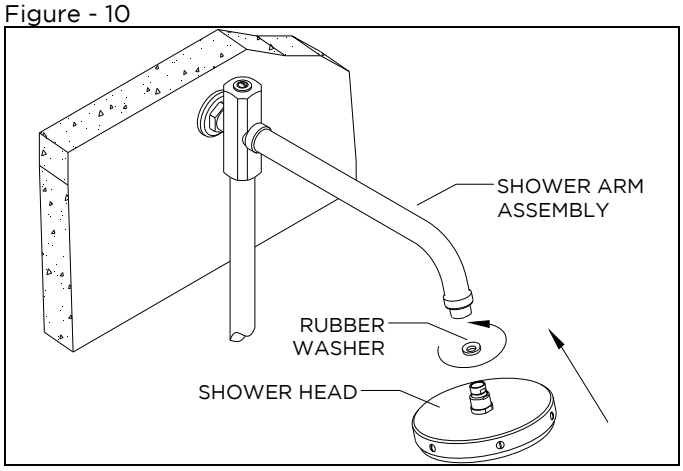


- **If further assistance is required, please contact Product Support at 1-800-927-2120 (8am-6pm EST).**
- **See service part document for parts ordering, available on WATERWORKS.COM.**