RW ATLAS
Wall Mounted Lavatory Faucet

INSTALLATION GUIDELINES

Metal Wheel Handles
Style No. RWLS60

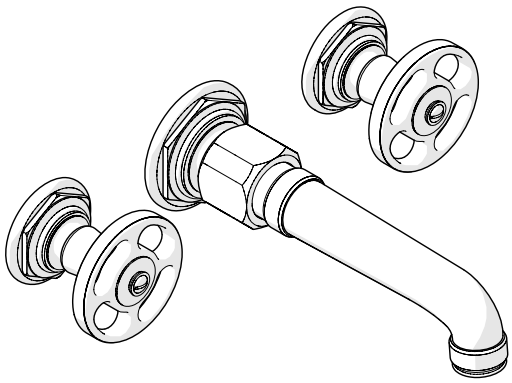

Metal Lever Handles
Style No. RWLS70

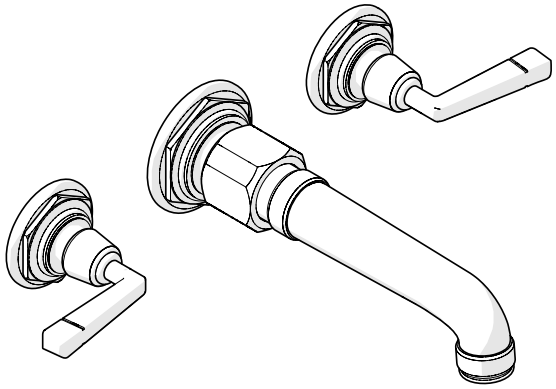

SPECIFICATIONS:

Control Valve Rough-In Depth Maximum: 5 -1/4″
Control Valve Rough-In Depth Minimum: 3-1/4″
Drain Depth Maximum: 2-5/8″
Drain Depth Minimum: 3/8″
Drain Hole Diameter: 1-3/4″
Drain Style: Push Touch (Drain Included)
Fitting Hole Diameter: 1-3/8″
Handle Spread: 8″ (NOT ADJUSTABLE)
Inlet Connection Size: 1/2″
Inlet Connection Type: Female NPT
Maximum Water Pressure: 80psi
Minimum Water Pressure: 20psi
Recommended Water Pressure: 45psi
Restricted Maximum Flow Rate: 2.2gpm

REQUIRED PLUMBING DETAILS:

Universal Lavatory Wall Mounted Rough (For RWVC60)
STYLE No. GULV27
CODE No. GUSV27

Universal Lavatory Wall Mounted Rough (For RWVC70)
STYLE No. GULV25
CODE No. GUSV25

IMPORTANT:

- To ensure this product is installed properly, you must read and follow these guidelines.
- The owner/user of this product must keep this information for future reference.
- The faucet must be onsite prior to rough-in and allows the installer to visualize the installation and match the 8″ center spread.
- Be sure your installation conforms to federal state, and local codes. In the State of Massachusetts, all installations must comply with the rules and regulations set forth within 248 CMR.
- This product must be installed by a professional licensed contractor.
- Inspect this product to ensure you have all the parts required for proper installation.
- Use only a strap wrench or protected/smooth-jaw wrench on any finished surface.
- DO NOT use putty on fittings.

ROUGH-IN:

- Rough-in Depth from center of inlets to surface of finished wall is 3-1/4″ Minimum and 5-1/4″ Maximum.
- Rough-in Height: 3-3/4″ minimum from center of cartridge stem to surface of countertop to allow for lever handle clearance in the open position.
- See Figure - 01 for steps 1-6

1. Run 1/2″ hot and cold supply lines. The spread between supplies is 8″ on center and is NOT adjustable.
2. Pre-solder a 1/2″ male NPT x 1/2″ Sweat adapter (not supplied) to a small piece of 1/2″ copper pipe prior to threading into the valve body.
3. Thread the adapters into the valve and attach to the supplies using 1/2″ couplings (not supplied).
4. Verify the supplies are secure, level, and at the proper spread of 8″ and at equal depths prior to making final solder connections.
5. Install a 1/2″ NPT nipple (not supplied) to temporarily serve as a spout.
6. Verify the supplies and valve body are secure, then turn on the supplies and check for leaks.

These guidelines have been prepared for the professional contractor to aid in the installation of:
RW ATLAS WALL MOUNTED LAVATORY WITH METAL WHEEL HANDLES (STYLE# RWLS60) & METAL LEVER HANDLES (STYLE # RWLS70)
All dimensions are based on original specification and are subject to change and variation.
Please consult your Design Associate for current specifications.
SEE SERVICE PART DOCUMENT FOR PART ORDERING, AVAILABLE ON WATERWORKS.COM

WATERWORKS

Figure - 01

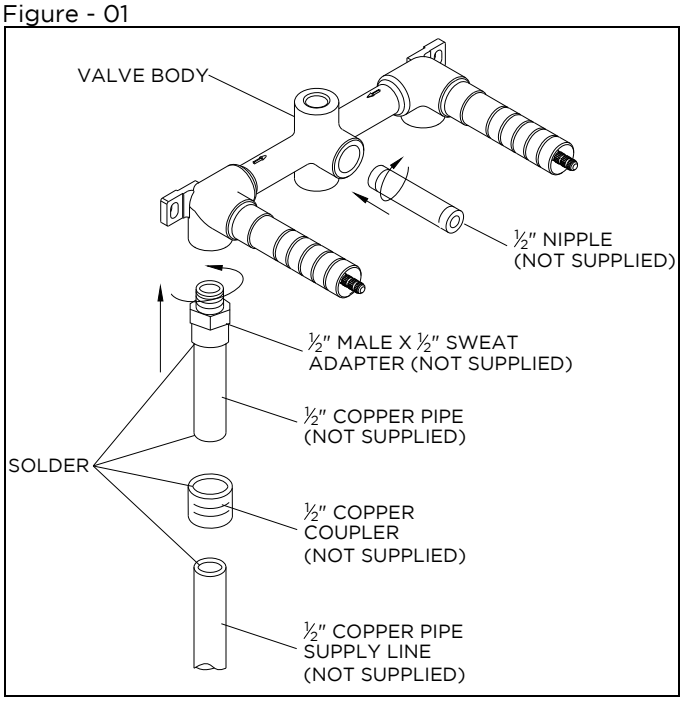

SPOUT INSTALLATION:

- See Figure - 02 for steps 7 - 9

7. After the finished wall is complete, thread a 1/2" NPT brass nipple (not supplied) of appropriate length into the valve tee.

8. Wrap the nipple with Teflon tape and thread on the spout, making sure the o-ring is behind the escutcheon. Tighten the spout and make sure it is oriented correctly. Note: The octagon collar is aesthetic only and is not to be used to tighten the spout.

9. If there is a gap between the wall and the escutcheon, the escutcheon can be unthreaded to contact the wall and the octagon collar can slide back to make up the difference.

Figure - 02

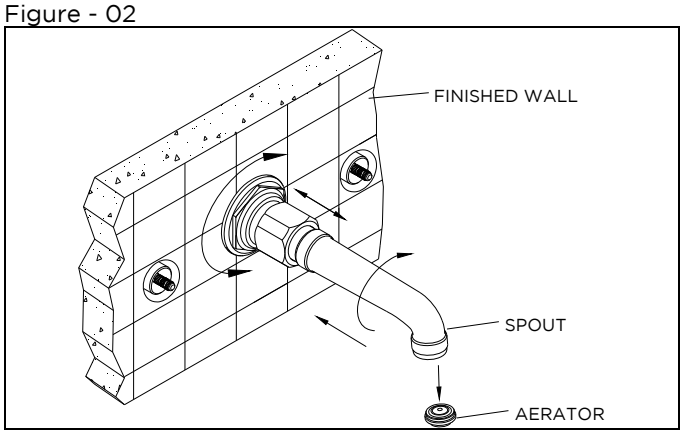

HANDLE INSTALLATION:

- See Figure - 03 for steps 9 & 10

10. After spout has been secured, mark the handle sleeves at the finished wall. Unthread the sleeves and cut 1/2" behind the mark.

11. Mark the cartridge stems at the wall, then unthread the cartridge from the valve body. Cut the cartridge stems 1/4" in front of the mark.

12. After the cuts have been made, thread cartridge and handles sleeves back onto valve body.

Figure - 03

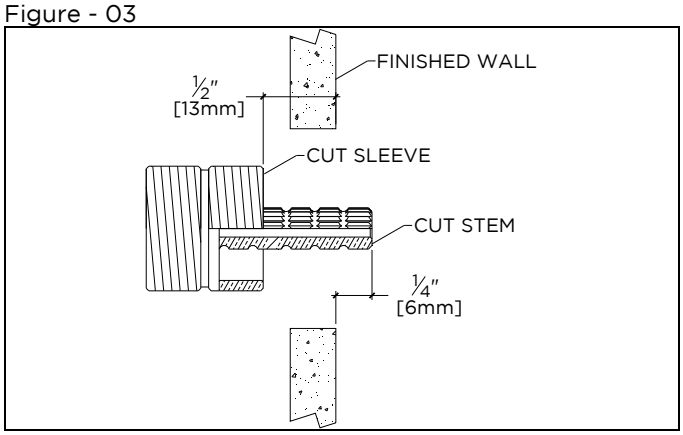

- See Figure - 04 for steps 12 & 13

13. Thread the trim nuts to the handle sleeves until they stop at the finished wall.

14. Install handle assembly by threading it into the trim adapter, making sure the o-ring is behind the escutcheon. Use the handle's knurled piece to get a good grip.

Figure - 04

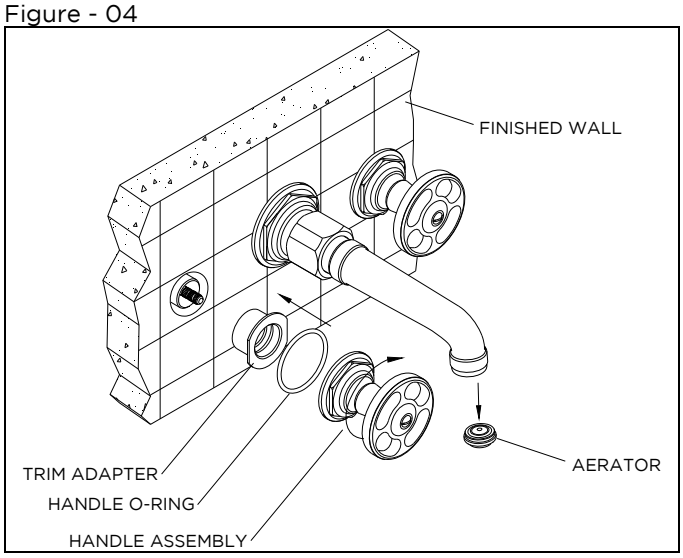

These guidelines have been prepared for the professional contractor to aid in the installation of:
RW ATLAS WALL MOUNTED LAVATORY WITH METAL WHEEL HANDLES (STYLE# RWLS60) & METAL LEVER HANDLES (STYLE # RWLS70)
All dimensions are based on original specification and are subject to change and variation.
Please consult your Design Associate for current specifications.
SEE SERVICE PART DOCUMENT FOR PART ORDERING, AVAILABLE ON WATERWORKS.COM

WATERWORKS

DRAIN INSTALLATION:

15. Unthread and remove the drain stopper and lower drain body from the drain flange. The foam washer can be discarded then remove the tailpiece from the lower drain body. See Figure - 05.

Figure - 05

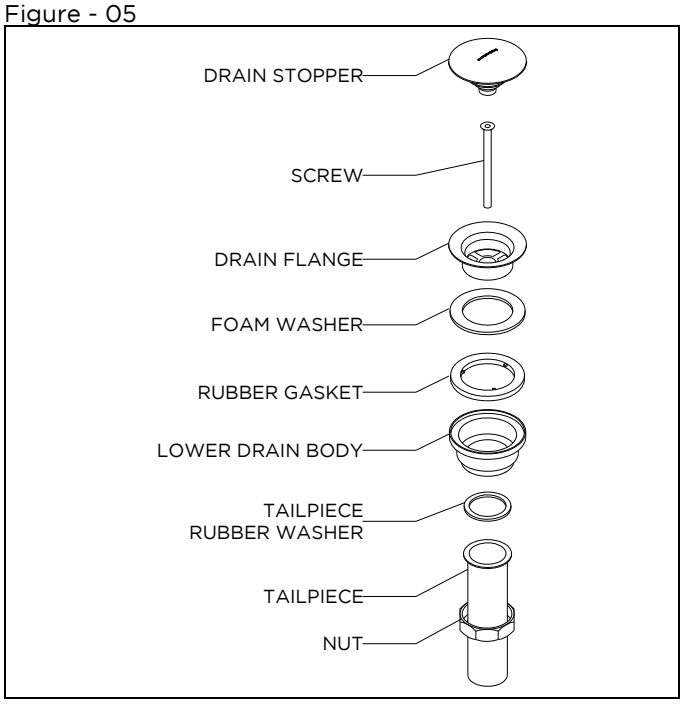

16. Set the drain flange in the lavatory drain opening using putty or a clear adhesive silicone depending on the mounting surface material.* Re-install the lower drain body with the screw, making sure to use the rubber gasket provided and tighten until fully secured. Putty or a clear adhesive silicone may be used to ensure a water-tight seal between the gasket and lavatory.* See Figure - 06.

Figure - 06

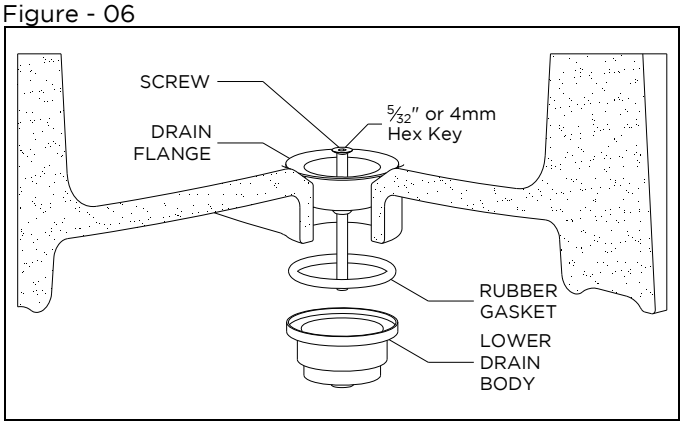

17. Re-install the tailpiece using the washer and nut then re-install the drain stopper.

INSPECT THE INSTALLATION:

18. Remove the flow restricting aerator using a flat head screwdriver or a coin, then carefully open the hot and cold valves to flush out any debris in the supply lines. See Figure 3.

19. Inspect all connections for leaks.

20. Close the drain and fill the sink with water to make sure the drain stopper and gasket operates and seals properly.

21. Re-install the flow restricting aerator making sure the washer is in place.

- The octagon collar on the spout and all of the hex collars can be rotated after installation to orientate to correct position.

* Putty contains oils and can cause permanent discoloration on certain materials such as marble, granite and any porous surface.

- **If further assistance is required, please contact Product Support at 1-800-927-2120 (8am-6pm EST).**

- **See service part document for parts ordering, available on WATERWORKS.COM.**

These guidelines have been prepared for the professional contractor to aid in the installation of:
RW ATLAS WALL MOUNTED LAVATORY WITH METAL WHEEL HANDLES (STYLE# RWLS60) & METAL LEVER HANDLES (STYLE # RWLS70)
All dimensions are based on original specification and are subject to change and variation.
Please consult your Design Associate for current specifications.
SEE SERVICE PART DOCUMENT FOR PART ORDERING, AVAILABLE ON WATERWORKS.COM

WATERWORKS