R.W. ATLAS

Exposed Thermostatic Valve with Metal Wheel Handlesin Matte Gold

STYLE No. RWXS01
REFERENCE No. RWXS01MG
ITEM No. 05-45035-35552

DESIGN
A groundbreaking, industrial-inspired collection entices with powerful shapes, genuine materials and unique aesthetic details. The original vision and impeccable execution of R.W. Atlas pairs American ingenuity with European craftsmanship.

FEATURES
Features knurled detail on the handle .

Maintains concealed piping for shower head and handshower options.

Features temperature engraved markings H, C and 100o

Offers a temperature limit stop with override button.

Special Order lead time is 10 - 12 weeks .

SHOWN IN Shown in Burnished Nickel

WATERWORKS IS A REGISTERED TRADEMARK OF WATERWORKS INC.

WATERWORKS
PRODUCT SUPPORT
800.927.2120
WATERWORKS.COM

R.W. ATLAS

Exposed Thermostatic Valve with Metal Wheel Handlesin Matte Gold

STYLE No. RWXS01
REFERENCE No. RWXS01MG
ITEM No. 05-45035-35552

All dimensions are based on original specifications and are subject to change and variation. Please consult your Design Associate for current specifications.

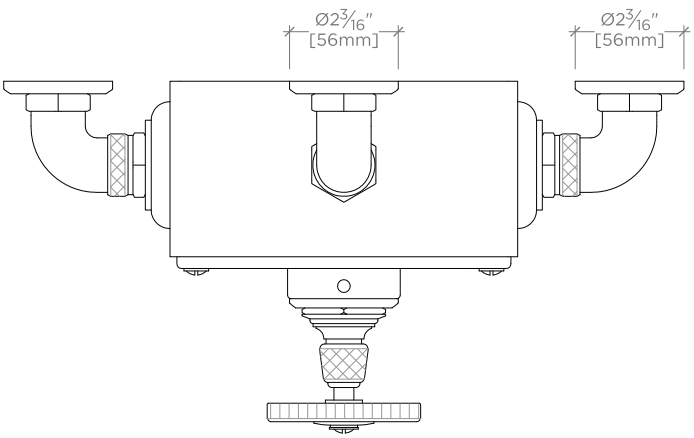

TOP VIEW SCALE: 3"=1'-0"

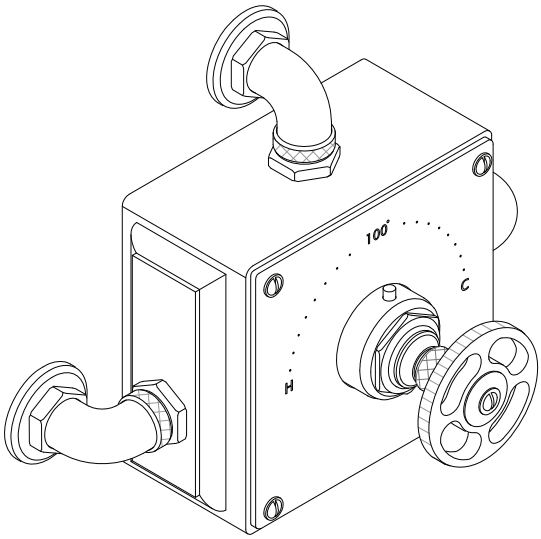

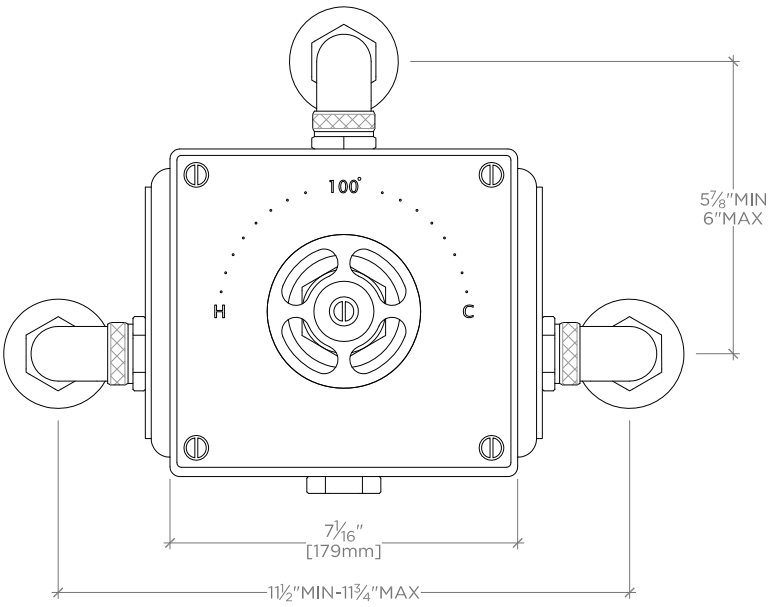

FRONT VIEW SCALE: 3"=1'-0"

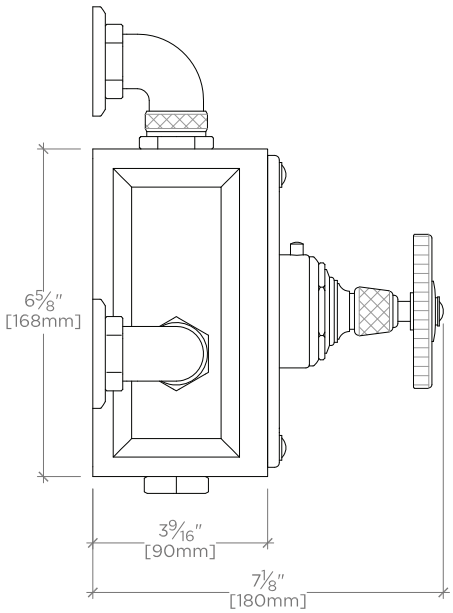

SIDE VIEW SCALE: 3"=1'-0"

WATERWORKS IS A REGISTERED TRADEMARK OF WATERWORKS INC.

R.W. ATLAS

Exposed Thermostatic Valve with Metal Wheel Handlesin Matte Gold

STYLE No. RWXS01
REFERENCE No. RWXS01MG
ITEM No. 05-45035-35552

SPECIFICATIONS
Primary Material: Brass
Inlet Connection Size: ¾″
Inlet Connection Type: Copper Compression
Inlet Supply Spread Maximum: 11 ¾″
Inlet Supply Spread Minimum: 11 ½″
Maximum Water Pressure: 80 psi
Minimum Water Pressure: 20 psi
Fittings Hole Diameter: 1″
Recommended Water Pressure: 45 psi
Restricted Maximum Flow Rate:

CARE INSTRUCTIONS
Please refer to Waterworks general guidelines for Care and Cleaning.

CODES AND STANDARDS
FLOW RATE CURVE

REQUIRED PLUMBING DETAILS
Below is a list of choices that must be made to complete your lavatory faucet.

WATERWORKS IS A REGISTERED TRADEMARK OF WATERWORKS INC.