R.W. ATLAS

Bridge Two Hole Kitchen Mixer with Metal Lever Side Mount Handles and Spray in Antique Brass

STYLE No. RWKM10
REFERENCE No. RWKM10AQB
ITEM No. 07-96462-32535

DESIGN

A groundbreaking, industrial-inspired collection entices with powerful shapes, genuine materials and unique aesthetic details. The original vision and impeccable execution of R.W. Atlas pairs American ingenuity with European craftsmanship.

FEATURES

Features horizontally mounted lever handles on the exposed valve body, available only with smooth barrels marked with an engraved H and C.

Integrated side spray allows for mixed water and features knurled detail on handle.

Meets or exceeds the Weighted Average Lead Requirements of 0.25%.

Flow rate regulated at 2.2 gallons per minute (gpm).

Stocked in Burnished Nickel and Unlacquered Brass.

SHOWN IN Shown in Burnished Nickel

WATERWORKS IS A REGISTERED TRADEMARK OF WATERWORKS INC.

WATERWORKS

PRODUCT SUPPORT
800.927.2120
WATERWORKS.COM

R.W. ATLAS

Bridge Two Hole Kitchen Mixer with Metal Lever Side Mount Handles and Spray in Antique Brass

STYLE No. RWKM10
REFERENCE No. RWKM10AQB
ITEM No. 07-96462-32535

All dimensions are based on original specifications and are subject to change and variation. Please consult your Design Associate for current specifications.

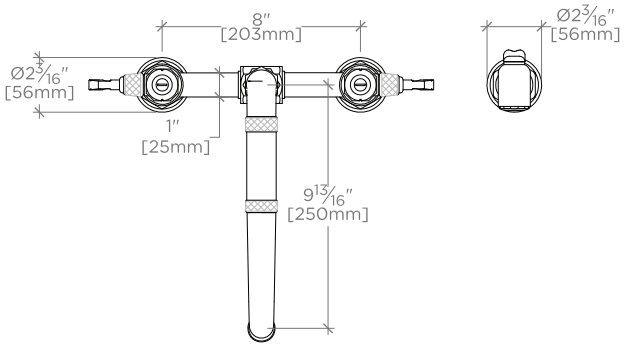

TOP VIEW SCALE: 1½″=1′-0″

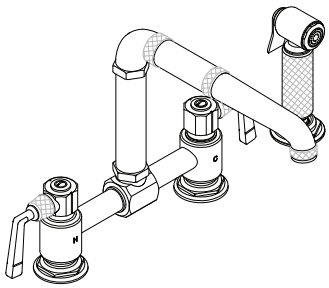

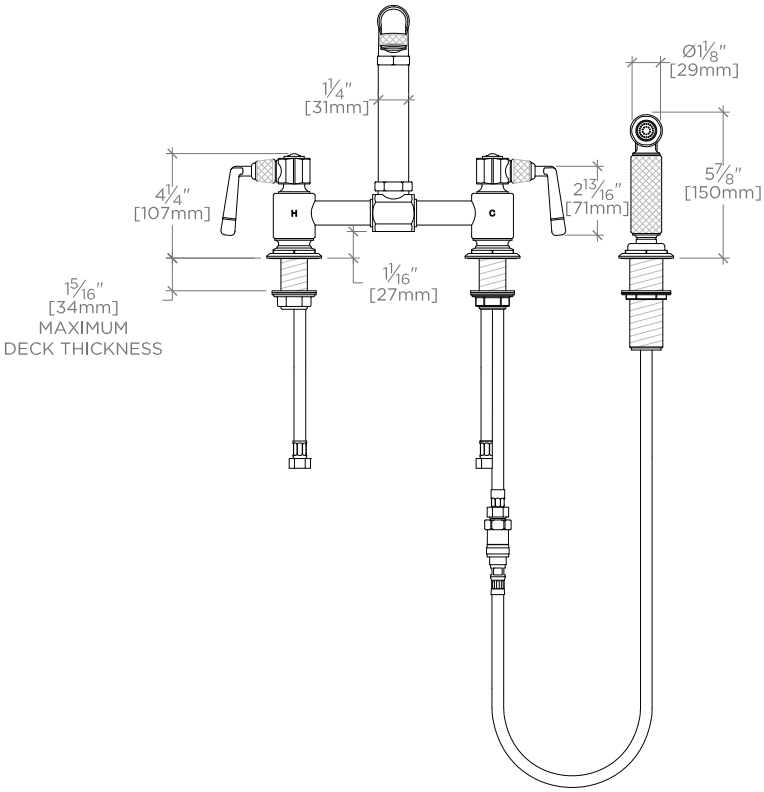

FRONT VIEW SCALE: 1½″=1′-0″

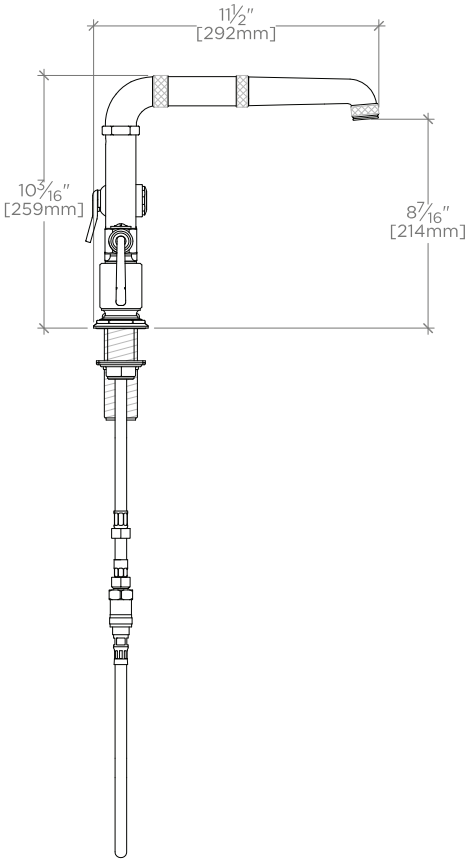

SIDE VIEW SCALE: 1½″=1′-0″

WATERWORKS IS A REGISTERED TRADEMARK OF WATERWORKS INC.

R.W. ATLAS

Bridge Two Hole Kitchen Mixer with Metal Lever Side Mount Handles and Spray in Antique Brass

STYLE No. RWKM10
REFERENCE No. RWKM10AQB
ITEM No. 07-96462-32535

SPECIFICATIONS
Primary Material: Brass
Handle Spread Maximum: 8″
Handle Spread Minimum: 8″
Inlet Connection Size: ⅜″
Inlet Connection Type: Compression Connector Hoses
Inlet Supply Spread Maximum:
Inlet Supply Spread Minimum:
Maximum Deck Thickness: 1 ½″
Minimum Deck Thickness: ⅜″
Maximum Water Pressure: 80 psi
Minimum Water Pressure: 20 psi
Fittings Hole Diameter: 1 ⅜″
Recommended Water Pressure: 45 psi
Restricted Maximum Flow Rate: 2.2 gpm

CARE INSTRUCTIONS
Please refer to Waterworks general guidelines for Care and Cleaning.

CODES AND STANDARDS
FLOW RATE CURVE

REQUIRED PLUMBING DETAILS
Below is a list of choices that must be made to complete your lavatory faucet.

WATERWORKS IS A REGISTERED TRADEMARK OF WATERWORKS INC.