WATERWORKS
PRODUCT SUPPORT
800.927.2120
WATERWORKS.COM

R.W. ATLAS

Wall Mounted Lavatory Faucet with Metal Lever Handles in Sovereign

STYLE No. RWLS70
REFERENCE No. RWLS70SO
ITEM No. 07-51256-79355

DESIGN

A groundbreaking, industrial-inspired collection entices with powerful shapes, genuine materials and unique aesthetic details. The original vision and impeccable execution of R.W. Atlas pairs American ingenuity with European craftsmanship.

FEATURES

Features knurled detail on the handles.

Includes European push touch style drain.

Meets or exceeds the Weighted Average Lead Requirements of 0.25%.

Flow rate regulated at 2.2 gallons per minute (gpm).

Special Order lead time is 10 - 12 weeks .

SHOWN IN Shown in Burnished Nickel

WATERWORKS IS A REGISTERED TRADEMARK OF WATERWORKS INC.

R.W. ATLAS

Wall Mounted Lavatory Faucet with Metal Lever Handles in Sovereign

STYLE No. RWLS70
REFERENCE No. RWLS70SO
ITEM No. 07-51256-79355

All dimensions are based on original specifications and are subject to change and variation. Please consult your Design Associate for current specifications.

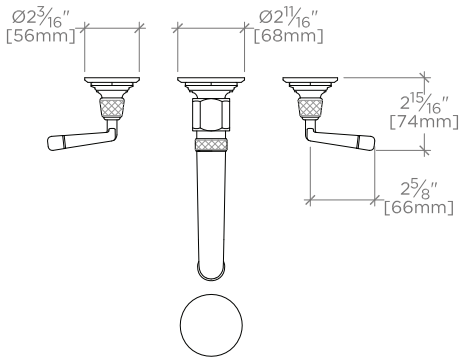

TOP VIEW SCALE: 1½"=1'-0"

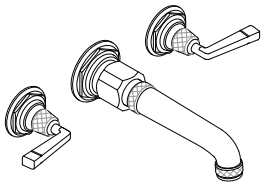

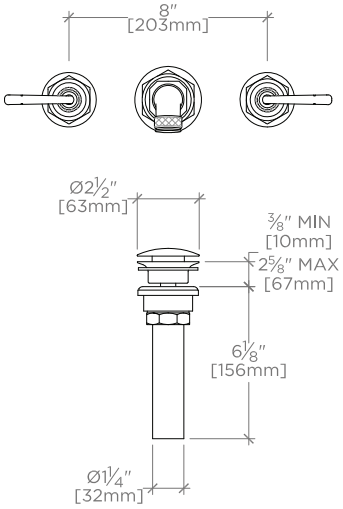

FRONT VIEW SCALE: 1½"=1'-0"

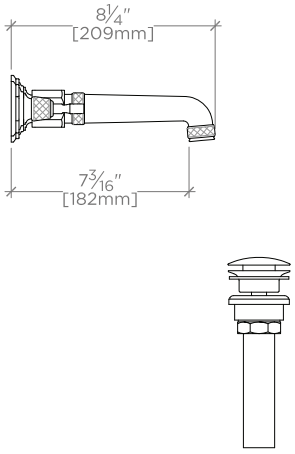

SIDE VIEW SCALE: 1½"=1'-0"

WATERWORKS IS A REGISTERED TRADEMARK OF WATERWORKS INC.

R.W. ATLAS

Wall Mounted Lavatory Faucet with Metal Lever Handles in Sovereign

STYLE No. RWLS70
REFERENCE No. RWLS70SO
ITEM No. 07-51256-79355

SPECIFICATIONS

Primary Material: Brass
Control Valve Rough-in Depth Maximum: 3 ⅝″
Control Valve Rough-in Depth Minimum: 1 ⅝″
Drain Depth Maximum: 2 ½″
Drain Depth Minimum: ⅜″
Drain Hole Diameter: 1 ¾″
Drain Style: Push-Touch
Handle Spread Maximum: 8″
Handle Spread Minimum: 8″
Inlet Connection Size: ½″
Inlet Connection Type: Female NPT
Inlet Supply Spread Maximum:
Inlet Supply Spread Minimum:
Maximum Water Pressure: 80 psi
Minimum Water Pressure: 20 psi
Fittings Hole Diameter: 1 ⅜″
Recommended Water Pressure: 45 psi
Restricted Maximum Flow Rate: 2.2 gpm

CARE INSTRUCTIONS

Please refer to Waterworks general guidelines for Care and Cleaning.

CODES AND STANDARDS

FLOW RATE CURVE

REQUIRED PLUMBING DETAILS

Below is a list of choices that must be made to complete your lavatory faucet.

WATERWORKS IS A REGISTERED TRADEMARK OF WATERWORKS INC.