HENRY

Low Profile Three Hole Deck Mounted Lavatory Faucet with Teak Cylinder and Metal Lever Handles in Chrome

STYLE No. HNLS11
REFERENCE No. HNLS11C
ITEM No. 07-94134-32330

DESIGN
Influenced by the connection of industry and art Henry easily transitions between modern, traditional, utilitarian and classic settings.

FEATURES
The manufacturing process encompasses casting, turning, forging, hand-fitting and hand polishing.

Teak is an organic, natural hardwood originating from Southeast Asia

Complies with 0.25% Weighted Average Lead Content (WALC).

Teak is known for its durability, but it is not recommended for use in a shower application.

SHOWN IN Teak/Nickel

WATERWORKS IS A REGISTERED TRADEMARK OF WATERWORKS INC.

HENRY

Low Profile Three Hole Deck Mounted Lavatory Faucet with Teak Cylinder and Metal Lever Handles in Chrome

STYLE No. HNLS11
REFERENCE No. HNLS11C
ITEM No. 07-94134-32330

All dimensions are based on original specifications and are subject to change and variation. Please consult your Design Associate for current specifications.

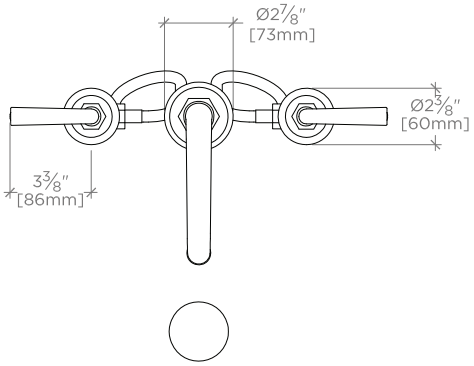

TOP VIEW SCALE: 1½"=1'-0"

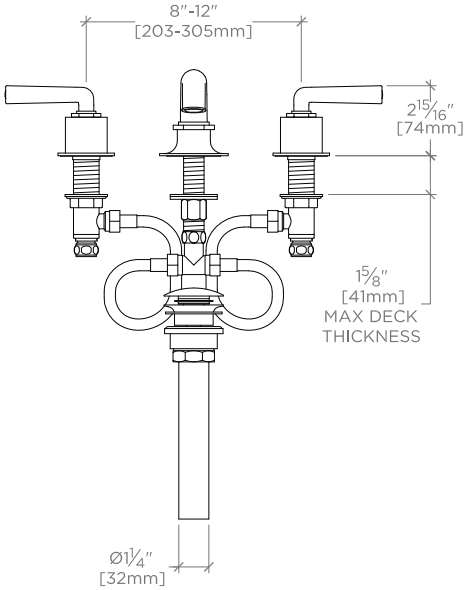

FRONT VIEW SCALE: 1½"=1'-0"

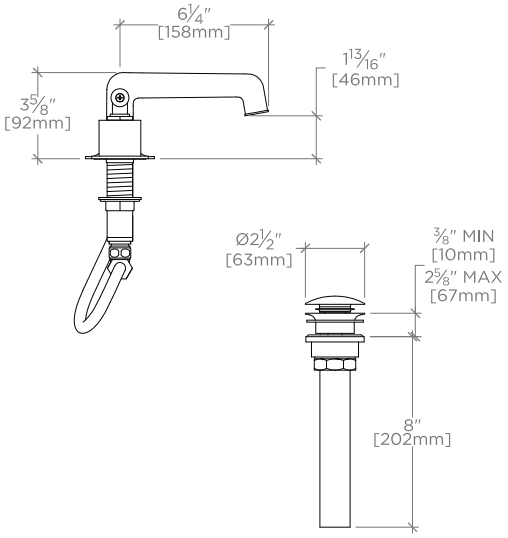

SIDE VIEW SCALE: 1½"=1'-0"

WATERWORKS IS A REGISTERED TRADEMARK OF WATERWORKS INC.

HENRY

Low Profile Three Hole Deck Mounted Lavatory Faucet with Teak Cylinder and Metal Lever Handles in Chrome

STYLE No. HNLS11
REFERENCE No. HNLS11C
ITEM No. 07-94134-32330

SPECIFICATIONS

Primary Material: Brass
Drain Depth Maximum: 2 ⅝″
Drain Depth Minimum: ⅜″
Drain Hole Diameter: 1 ¾″
Drain Style: Push Touch
Handle Spread Maximum: 12″
Handle Spread Minimum: 8″
Inlet Connection Size: ½″
Inlet Connection Type: Male with supply nut
Inlet Supply Spread Maximum:
Inlet Supply Spread Minimum:
Maximum Deck Thickness: 1 ⅝″
Minimum Deck Thickness: 3/16″
Maximum Water Pressure: 80 psi
Minimum Water Pressure: 20 psi
Fittings Hole Diameter: 1 ¼″
Recommended Water Pressure: 45 psi
Restricted Maximum Flow Rate: 2.2 gpm

CARE INSTRUCTIONS

For Teak Cylinders, teak oil only is recommended for long lasting protection from dirt and dust. A yearly application of teak oil will suffice, being careful to limit the contact with the metal finish.

CODES AND STANDARDS

FLOW RATE CURVE

REQUIRED PLUMBING DETAILS

Below is a list of choices that must be made to complete your lavatory faucet.

WATERWORKS IS A REGISTERED TRADEMARK OF WATERWORKS INC.