GILBERT

Wall Mounted Single Arm Sconce with Opal Glass Shade in Antique Brass

STYLE No. 529138
REFERENCE No. Reference-Number
ITEM No. 18-60329-02022

DESIGN
Our Gilbert lighting collection is Inspired by the American industrial era.

FEATURES
UL listed for use in damp environments.

Uses one 60 watt max incandescent T-10 (not supplied) or 100 watt max incandescent A-19 (not supplied).

SHOWN IN Nickel

WATERWORKS IS A REGISTERED TRADEMARK OF WATERWORKS INC.

GILBERT

Wall Mounted Single Arm Sconce with Opal Glass Shade in Antique Brass

STYLE No. 529138
REFERENCE No. Reference-Number
ITEM No. 18-60329-02022

All dimensions are based on original specifications and are subject to change and variation. Please consult your Design Associate for current specifications.

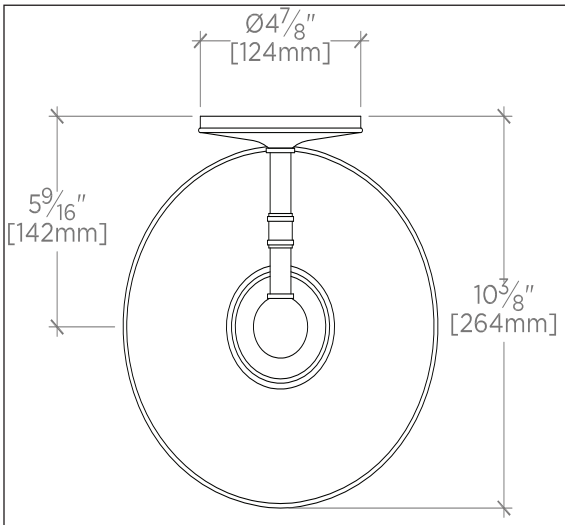

TOP VIEW SCALE: 1½″=1′-0″

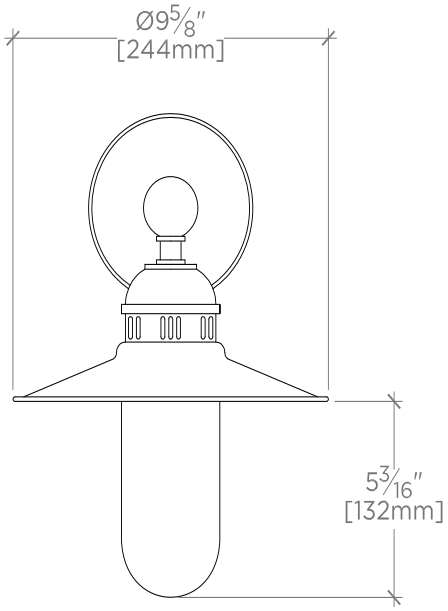

FRONT VIEW SCALE: 1½″=1′-0″

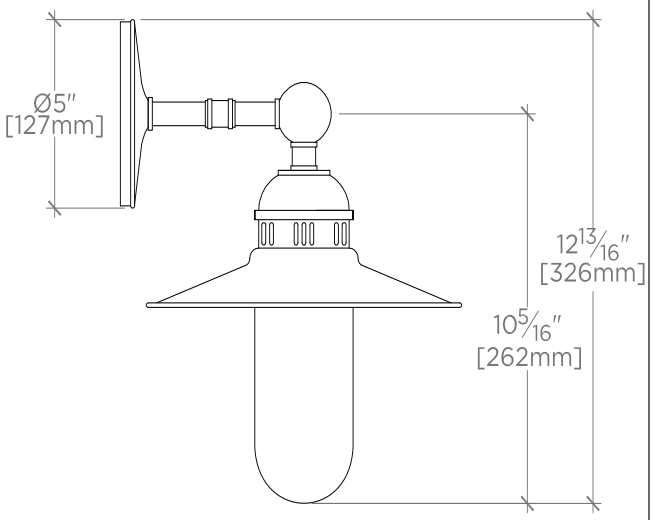

SIDE VIEW SCALE: 1½″=1′-0″

WATERWORKS IS A REGISTERED TRADEMARK OF WATERWORKS INC.

GILBERT

Wall Mounted Single Arm Sconce with Opal Glass Shade in Antique Brass

STYLE No. 529138
REFERENCE No. Reference-Number
ITEM No. 18-60329-02022

SPECIFICATIONS
Primary Material: Made of Brass
Ambient / Task: Ambient
Bulb Base Size: Medium E-26
Bulb Type: 60 watt max incandescent T-10 (not supplied) or 100 watt max incandescent A-19 (not supplied)
Electric Requirements:
Installation Type: Wall Mounted
Junction Box Orientation: Any
Junction Box Size (L x W): 3 ½" x 3 ½" Octagonal
Light Direction: Down and through the shade
Number of Bulbs: One
Orientation: Down
Required Electrical Feeds: Black or "Hot" lead wire, white or "Neutral" lead wire and a green or bare copper "Ground" wire.
Safety Warnings: DO NOT EXCEED MAX WATTAGE
Shade Finish:
Shade Fitter Size:
Shade Material: Glass
Shade Shape: Cylinder
Suggested Application:
Voltage: 120
Wattage: 60 watts for T-10 bulbs and 100 watts for A-19 bulbs
Wet / Dry: Damp or Dry

CARE INSTRUCTIONS

CODES AND STANDARDS
cUL, UL

WATERWORKS IS A REGISTERED TRADEMARK OF WATERWORKS INC.