.25

Freestanding Oval Bathtub 70″ x 40″ x 29″
in Ivory Glossy

STYLE No. PTBT25
REFERENCE No. PTBT25I
ITEM No. 13-78384-24766

DESIGN
The signature details of our .25 collection serve as the inspiration for the .25 range. Graceful, clean, reductive sculptural forms deliver water in the most modern way possible, through elegant simplicity.

FEATURES

SHOWN IN Matte White

WATERWORKS IS A REGISTERED TRADEMARK OF WATERWORKS INC.

.25

Freestanding Oval Bathtub 70″ x 40″ x 29″
in Ivory Glossy

STYLE No. PTBT25
REFERENCE No. PTBT25I
ITEM No. 13-78384-24766

All dimensions are based on original specifications and are subject to change and variation. Please consult your Design Associate for current specifications.

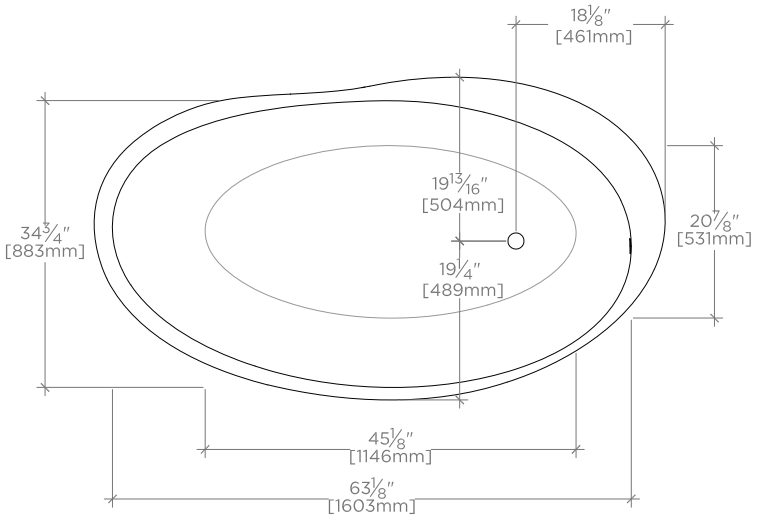

TOP VIEW SCALE: 1/2″=1′-0″

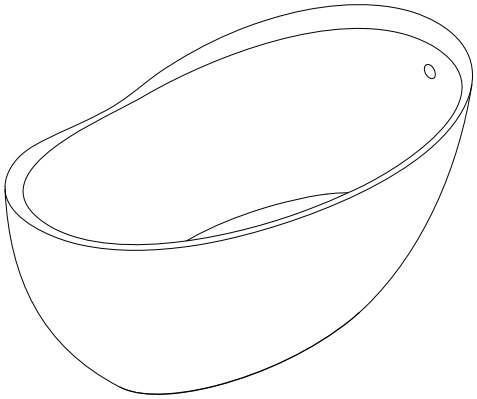

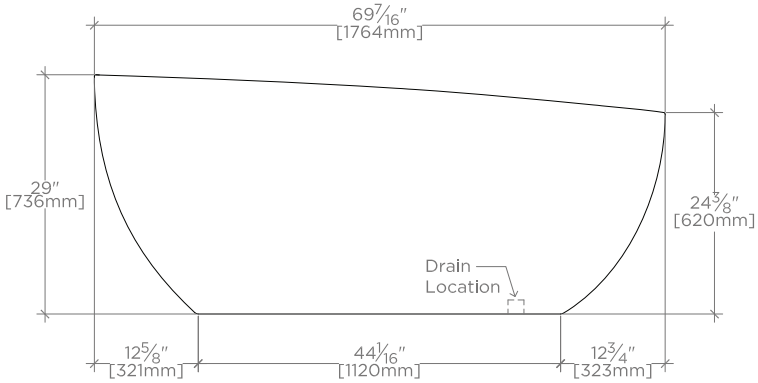

SIDE VIEW SCALE: 1/2″=1′-0″

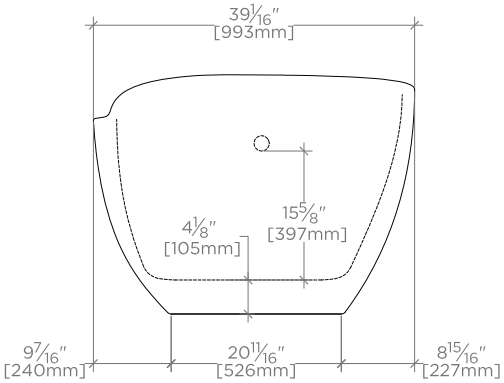

END VIEW SCALE: 1/2″=1′-0″

WATERWORKS IS A REGISTERED TRADEMARK OF WATERWORKS INC.

.25

Freestanding Oval Bathtub 70″ x 40″ x 29″ in Ivory Glossy

STYLE No. PTBT25
REFERENCE No. PTBT25I
ITEM No. 13-78384-24766

SPECIFICATIONS

Primary Material: Composite
ADA Compliance: No
Adjustable Levelers / Feet: No
Bathing Type: Bathing and Soaking
Bottom Angle / Pitch: 6.5 Deg
Depth to Overflow:
Dimension Tolerance:
Drain Hole Depth:
Drain Hole Diameter:
Drilling Option: None
Installation Type: Freestanding
Material / Wall Thickness: ¼″
Number of Feet:
Overflow Hole Depth:
Overflow Hole Diameter:
Overflow Opening: With Overflow Opening
Single or Double Ended: Single Ended
Slip Resistance: No
Waste and Overflow Outlet Spread:
Water Capacity: 90 gal

CARE INSTRUCTIONS

Wash surfaces gently with a soft damp cloth; use a neutral liquid soap with water for daily cleaning, dry any overspray.

CODES AND STANDARDS

UL, cUL, State of MA

REQUIRED PLUMBING DETAILS

Below is a list of choices that must be made to complete your lavatory faucet.

WATERWORKS IS A REGISTERED TRADEMARK OF WATERWORKS INC.