HENRY

Gooseneck Three Hole Deck Mounted Lavatory Faucet with Metal Lever Handles in Unlacquered Brass

STYLE No. HNLS30
REFERENCE No. HNLS30UB
ITEM No. 07-11494-33975

DESIGN
Influenced by the connection of industry and art, Henry easily transistions between modern, traditional, utilitarian and classic settings.

FEATURES
The manufacturing process encompasses casting, turning, forging, hand-fitting and hand polishing.

Brass material is used for components

Complies with 0.25% Weighted Average Lead Content (WALC).

SHOWN IN Unlaquered Brass

WATERWORKS IS A REGISTERED TRADEMARK OF WATERWORKS INC.

HENRY

Gooseneck Three Hole Deck Mounted Lavatory Faucet with Metal Lever Handles in Unlacquered Brass

STYLE No. HNLS30
REFERENCE No. HNLS30UB
ITEM No. 07-11494-33975

All dimensions are based on original specifications and are subject to change and variation. Please consult your Design Associate for current specifications.

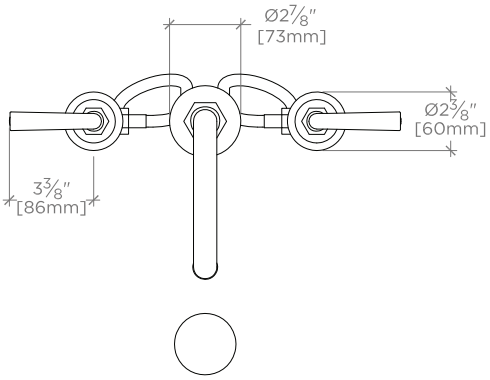

TOP VIEW SCALE: 1½"=1'-0"

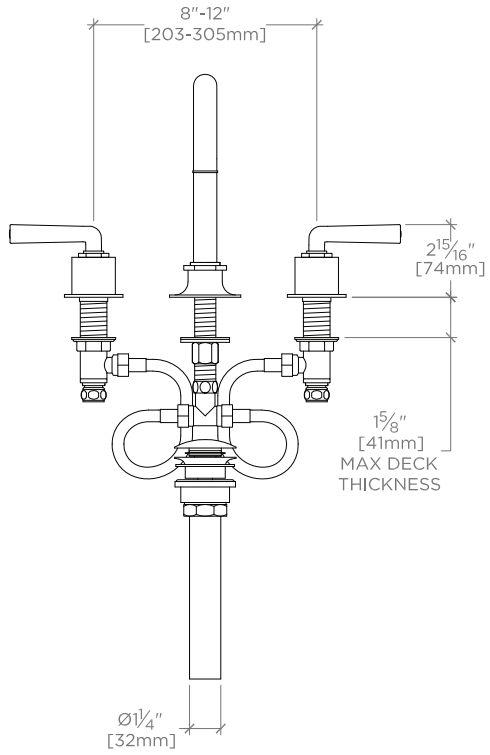

FRONT VIEW SCALE: 1½"=1'-0"

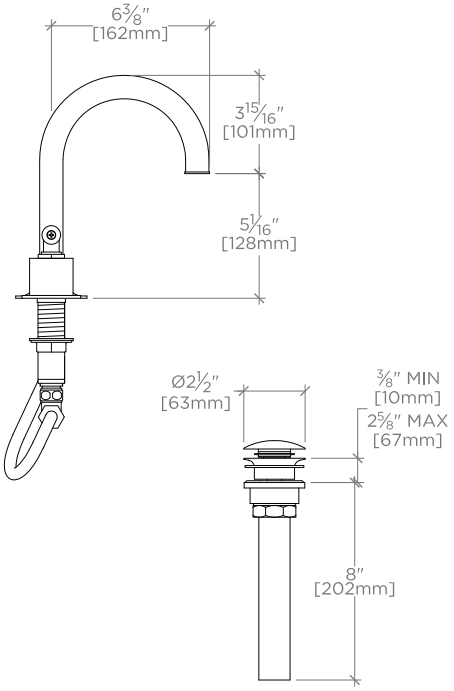

SIDE VIEW SCALE: 1½"=1'-0"

WATERWORKS IS A REGISTERED TRADEMARK OF WATERWORKS INC.

HENRY

Gooseneck Three Hole Deck Mounted Lavatory Faucet with Metal Lever Handles in Unlacquered Brass

STYLE No. HNLS30
REFERENCE No. HNLS30UB
ITEM No. 07-11494-33975

SPECIFICATIONS
Primary Material: Brass
Drain Depth Maximum:
Drain Depth Minimum:
Drain Hole Diameter: 1 ¾″
Drain Style:
Handle Spread Maximum:
Handle Spread Minimum:
Inlet Connection Size: ½″
Inlet Connection Type: Male with supply nut
Inlet Supply Spread Maximum:
Inlet Supply Spread Minimum:
Maximum Deck Thickness: 1 ⅝″
Minimum Deck Thickness: 3/16″
Maximum Water Pressure: 80 psi
Minimum Water Pressure: 20 psi
Fittings Hole Diameter:
Recommended Water Pressure: 45 psi
Restricted Maximum Flow Rate:

CARE INSTRUCTIONS

CODES AND STANDARDS
Complies with ASME A112.18.1/CSA B125.1, ASME A112.18.2 / CSA B125.2, NSF 61, ADA and 0.25% Weighted Average Lead Content. Certified with IAPMO, cUPC, NSF and State of MA.

FLOW RATE CURVE

REQUIRED PLUMBING DETAILS
Below is a list of choices that must be made to complete your lavatory faucet.

WATERWORKS IS A REGISTERED TRADEMARK OF WATERWORKS INC.