# ETOILE

Exposed Thermostatic System with 8″ Shower Rose and Handshower and White Porcelain Lever Handles in Unlacquered Brass

**STYLE No.** ETXS58
**REFERENCE No.** ETSV58UB
**ITEM No.** 05-46112-71485



**DESIGN**
Defined elegance. Etoile has a European sophistication with a timeless sense of chic.

**FEATURES**
The sculptural quality of the exposed thermostatic shower elevates the bath into an extraordinary experience.

This item is stocked in a Chrome, Nickel or Matte Nickel finish and is available to ship in 2-3 business days (subject to availability) from Waterworks. Additional made-to-order finish options listed below are available in 12 weeks from purchase.

Features a swivel 8″ shower rose.

Allows bather to adjust temperature and volume of shower rose and handshower.

Flow rate regulated at 2.5 gallons per minute (gpm).

SHOWN IN Nickel



WATERWORKS IS A REGISTERED TRADEMARK OF WATERWORKS INC.

# ETOILE

Exposed Thermostatic System with 8″ Shower Rose and Handshower and White Porcelain Lever Handles in Unlacquered Brass

**STYLE No.** ETXS58
**REFERENCE No.** ETSV58UB
**ITEM No.** 05-46112-71485



*All dimensions are based on original specifications and are subject to change and variation. Please consult your Design Associate for current specifications.*

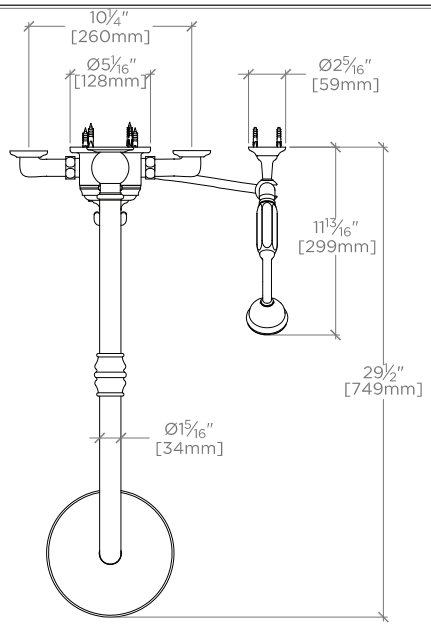


TOP VIEW SCALE: 1″=1′-0″

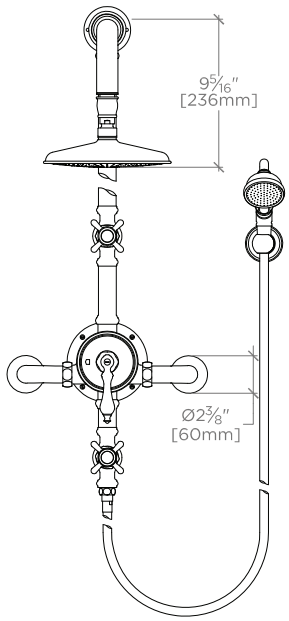


FRONT VIEW SCALE: 1″=1′-0″

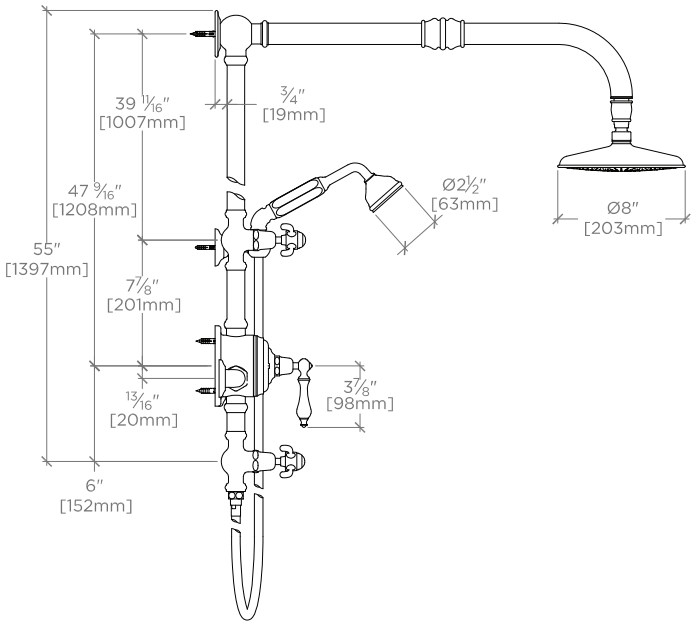


SIDE VIEW SCALE: 1″=1′-0″



WATERWORKS IS A REGISTERED TRADEMARK OF WATERWORKS INC.

# ETOILE

Exposed Thermostatic System with 8″ Shower Rose and Handshower and White Porcelain Lever Handles in Unlacquered Brass

**STYLE No.** ETXS58
**REFERENCE No.** ETSV58UB
**ITEM No.** 05-46112-71485



## SPECIFICATIONS

Primary Material: Brass
Inlet Connection Size: ¾″
Inlet Connection Type: Female NPT
Inlet Supply Spread Maximum: 10 ¼″
Inlet Supply Spread Minimum: 10 ¼″
Maximum Water Pressure: 80 psi
Minimum Water Pressure: 20 psi
Fittings Hole Diameter: 1 ⅜″
Recommended Water Pressure: 45 psi
Restricted Maximum Flow Rate: 2.5 gpm

## CARE INSTRUCTIONS

To clean the finish, wipe gently with a soft damp cloth and then with a soft dry towel. A mild soap solution can be used for daily cleaning.

## CODES AND STANDARDS

ASME A112.18.1 / CSA B125.1, State of MA

## FLOW RATE CURVE

## REQUIRED PLUMBING DETAILS

Below is a list of choices that must be made to complete your lavatory faucet.



WATERWORKS IS A REGISTERED TRADEMARK OF WATERWORKS INC.