ETOILE

Exposed Thermostatic System with 8″ Shower Rose and Handshower and White Porcelain Lever Handles in Architectural Bronze

STYLE No. ETXS58
REFERENCE No. ETSV58AB
ITEM No. 05-57061-75600

DESIGN
Defined elegance. Etoile has a European sophistication with a timeless sense of chic.

FEATURES
The sculptural quality of the exposed thermostatic shower elevates the bath into an extraordinary experience.

This item is stocked in a Chrome, Nickel or Matte Nickel finish and is available to ship in 2-3 business days (subject to availability) from Waterworks. Additional made-to-order finish options listed below are available in 12 weeks from purchase.

Features a swivel 8″ shower rose.

Allows bather to adjust temperature and volume of shower rose and handshower.

Flow rate regulated at 2.5 gallons per minute (gpm).

SHOWN IN Nickel

WATERWORKS IS A REGISTERED TRADEMARK OF WATERWORKS INC.

ETOILE

Exposed Thermostatic System with 8″ Shower Rose and Handshower and White Porcelain Lever Handles in Architectural Bronze

STYLE No. ETXS58
REFERENCE No. ETSV58AB
ITEM No. 05-57061-75600

All dimensions are based on original specifications and are subject to change and variation. Please consult your Design Associate for current specifications.

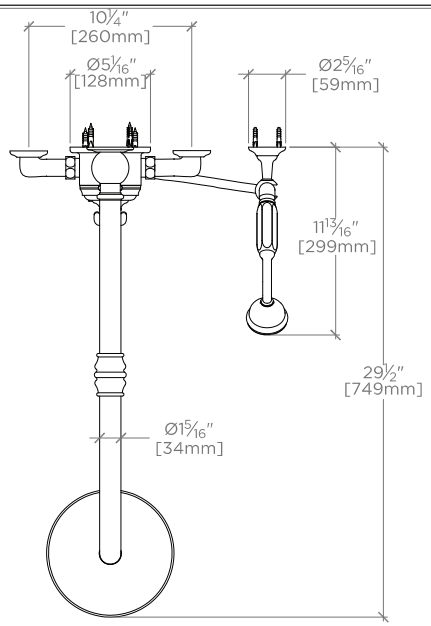

TOP VIEW SCALE: 1″=1′-0″

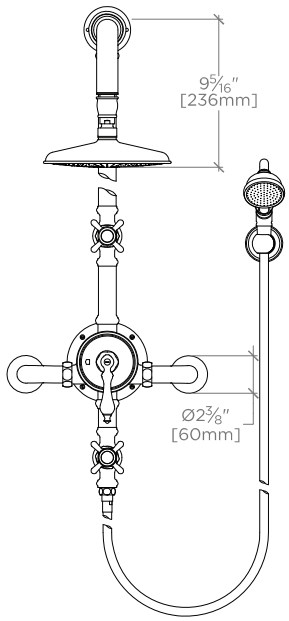

FRONT VIEW SCALE: 1″=1′-0″

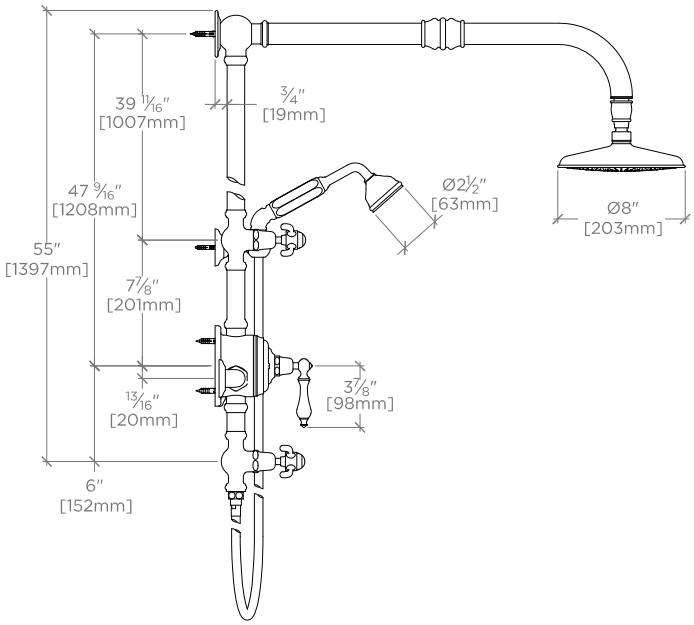

SIDE VIEW SCALE: 1″=1′-0″

WATERWORKS IS A REGISTERED TRADEMARK OF WATERWORKS INC.

ETOILE

Exposed Thermostatic System with 8″ Shower Rose and Handshower and White Porcelain Lever Handles in Architectural Bronze

STYLE No. ETXS58
REFERENCE No. ETSV58AB
ITEM No. 05-57061-75600

SPECIFICATIONS

Primary Material: Brass
Inlet Connection Size: ¾″
Inlet Connection Type: Female NPT
Inlet Supply Spread Maximum: 10 ¼″
Inlet Supply Spread Minimum: 10 ¼″
Maximum Water Pressure: 80 psi
Minimum Water Pressure: 20 psi
Fittings Hole Diameter: 1 ⅜″
Recommended Water Pressure: 45 psi
Restricted Maximum Flow Rate: 2.5 gpm

CARE INSTRUCTIONS

To clean the finish, wipe gently with a soft damp cloth and then with a soft dry towel. A mild soap solution can be used for daily cleaning.

CODES AND STANDARDS

ASME A112.18.1 / CSA B125.1, State of MA

FLOW RATE CURVE

REQUIRED PLUMBING DETAILS

Below is a list of choices that must be made to complete your lavatory faucet.

WATERWORKS IS A REGISTERED TRADEMARK OF WATERWORKS INC.